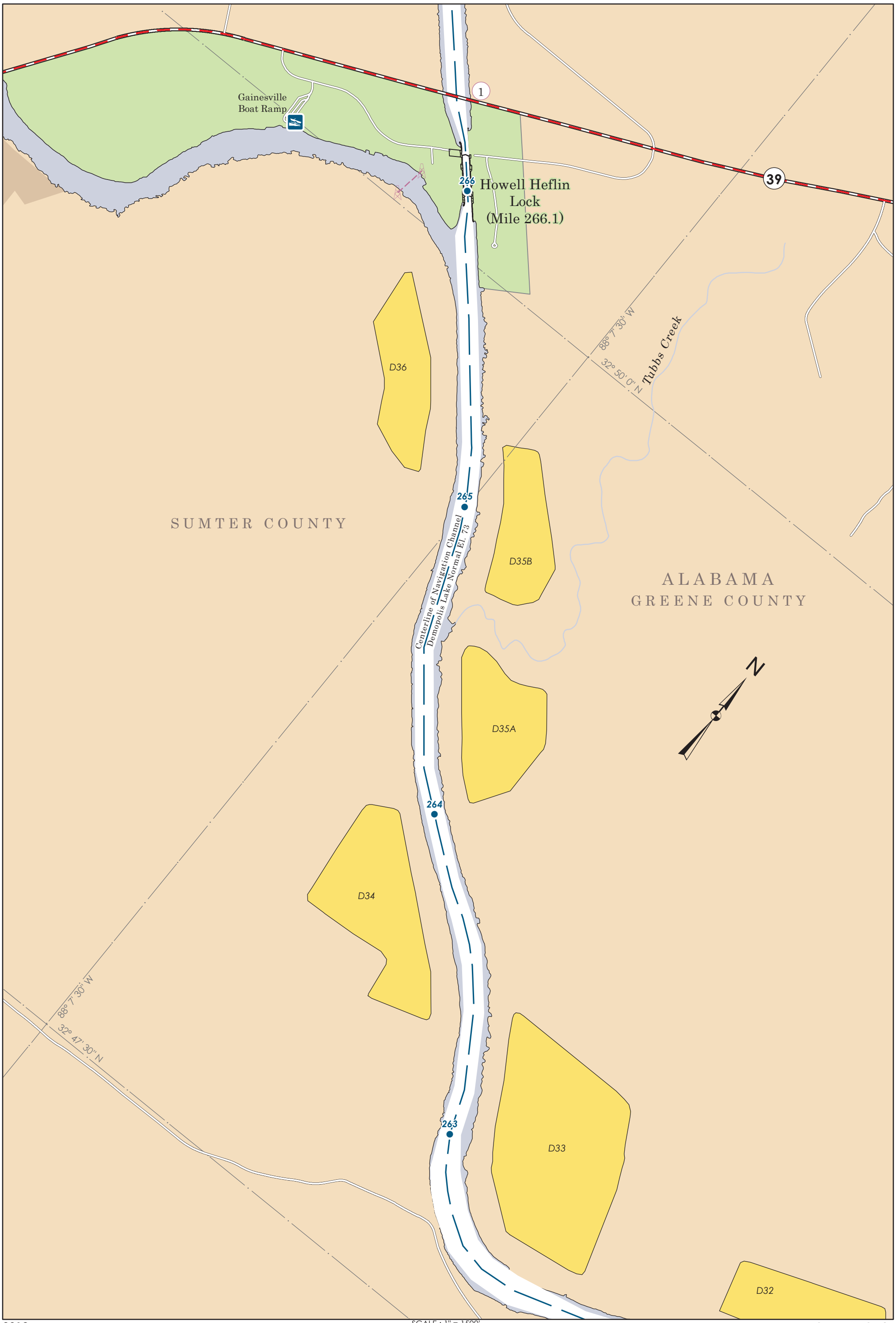
Gainesville
Boat Ramp
1
39
266
Howell Heflin
Lock
(Mile 266.1)
D36
88° 7' 30" W
32° 50' 0" N
Tubbs Creek
265
SUMTER COUNTY
Centerline of Navigation Channel
Demopolis Lake Normal El. 73
D35B
ALABAMA
GREENE COUNTY
N
D35A
264
D34
88° 7' 30" W
32° 47' 30" N
263
D33
D32

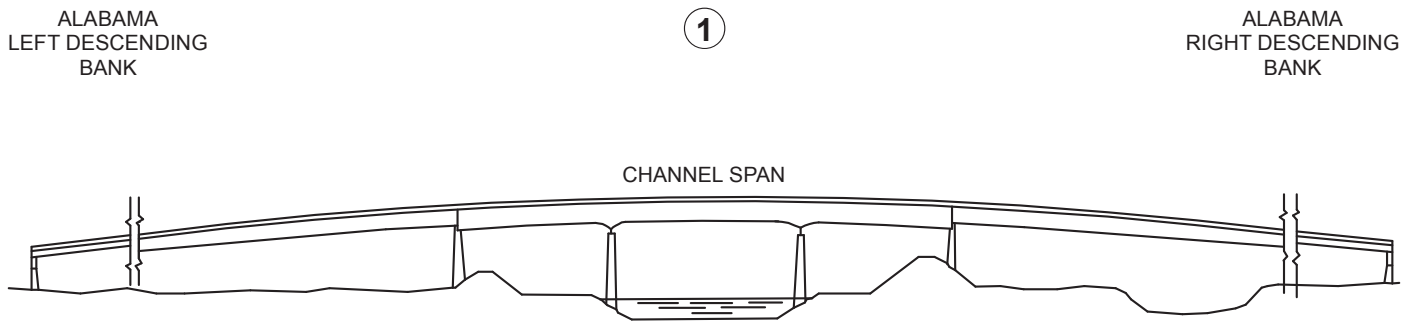

ALABAMA HIGHWAY 39 BRIDGE

NOT TO SCALE
RIVER MILE 266.3

Elevation of Low Steel	161.0'
Vertical Clearance at Normal Pool	52.0'
Vertical Clearance at 1% Duration Flood	49.0'
Horizontal Clearance	300.0'

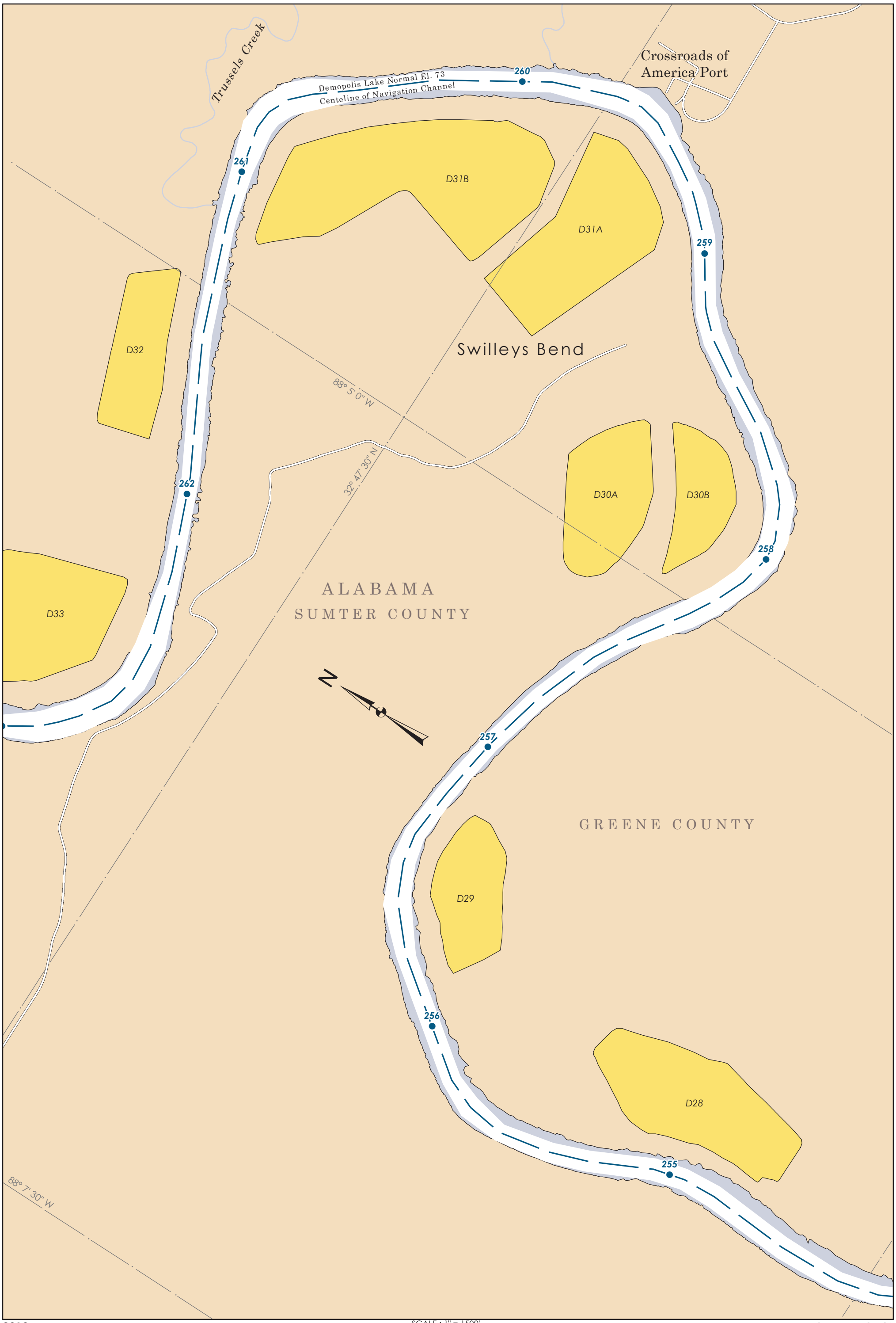

2012

SCALE : 1" = 1500'

0.5 0 0.5 1 Miles

CHART NO. 46

NAVIGATION MILE 255 - 262

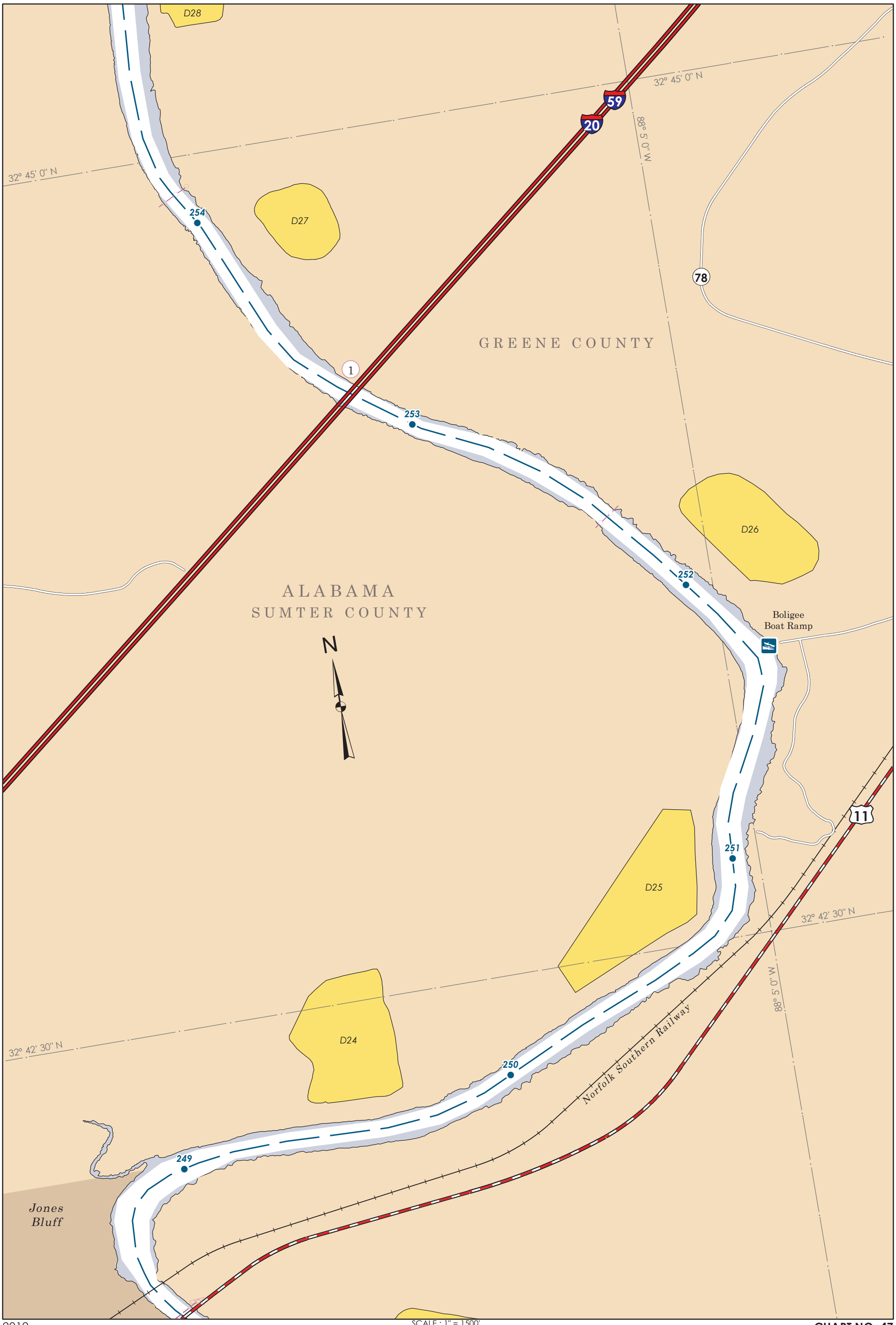
D28
D27
D26
D25
D24
32° 45' 0" N
32° 42' 30" N
88° 5' 0" W
59
20
78
11
254
253
252
251
250
249
1
GREENE COUNTY
ALABAMA
SUMTER COUNTY
N
Boligee
Boat Ramp
Norfolk Southern Railway
Jones
Bluff

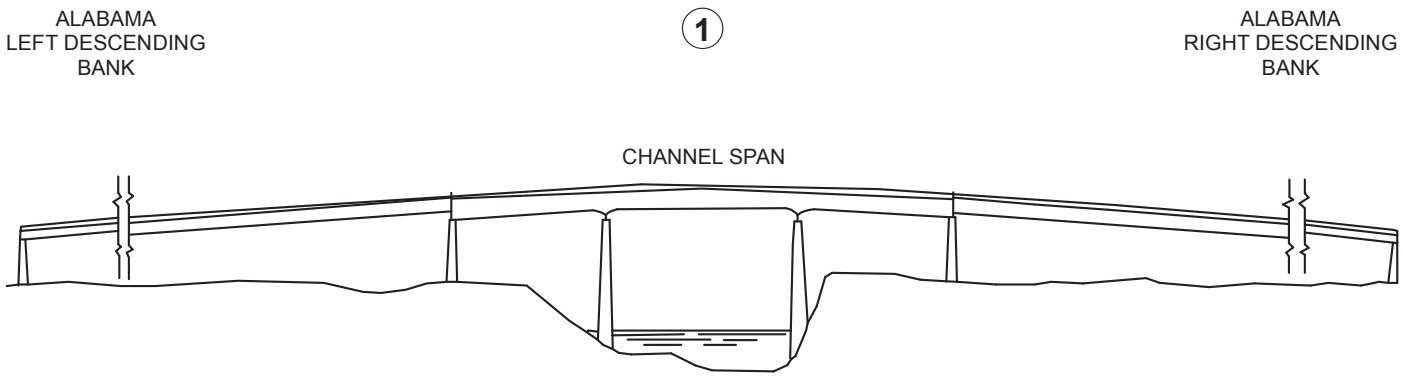

INTERSTATE HIGHWAY 59 & 20 TWIN BRIDGES

NOT TO SCALE
RIVER MILE 253.2

Elevation of Low Steel	140.8'
Vertical Clearance at Normal Pool	67.8'
Vertical Clearance at 1% Duration Flood	40.0'
Horizontal Clearance	300.0'

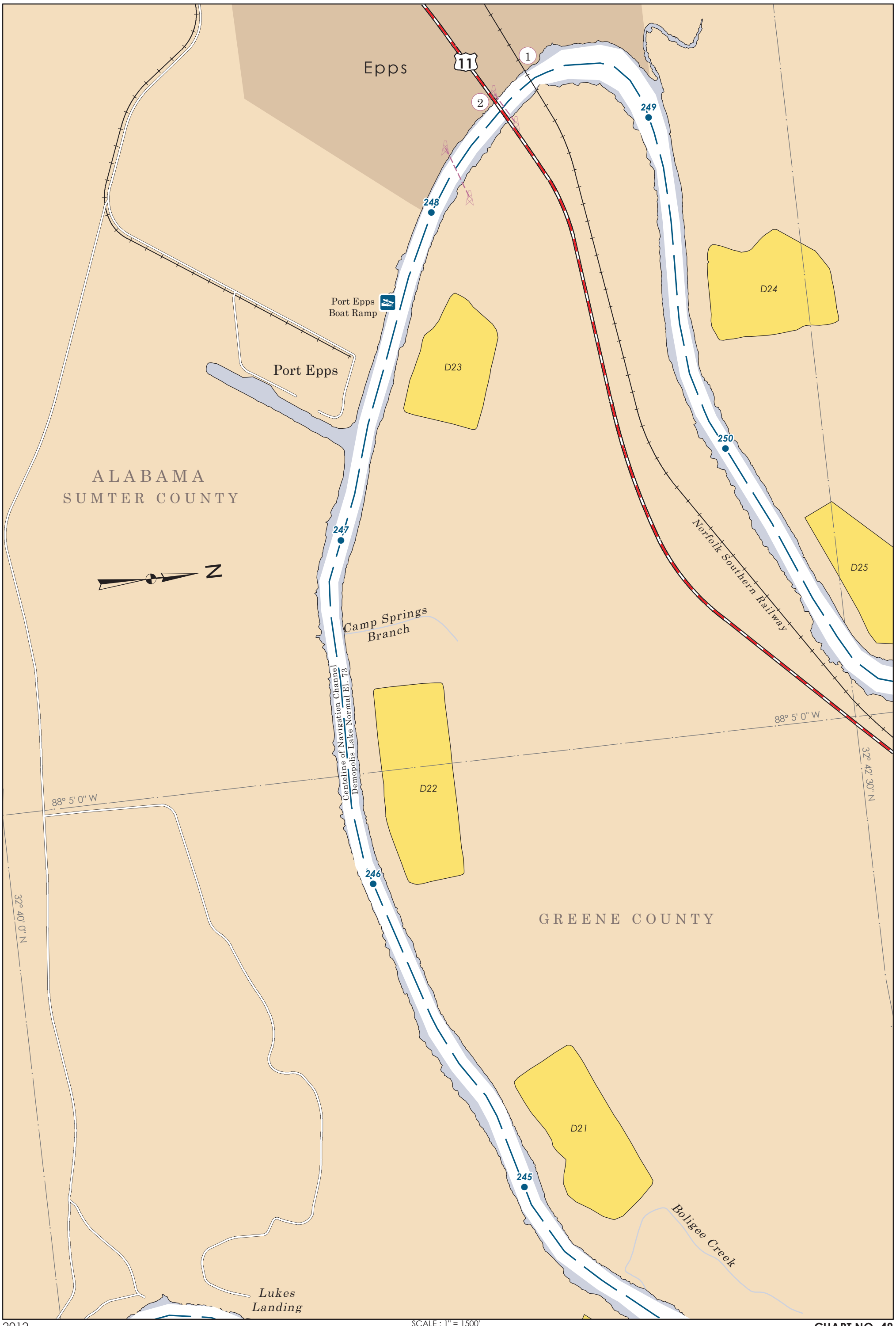

SCALE : 1" = 1500'

0.5 0 0.5 1 Miles

CHART NO. 48
NAVIGATION MILE 245 - 250

ALABAMA
LEFT DESCENDING
BANK

1

ALABAMA
RIGHT DESCENDING
BANK

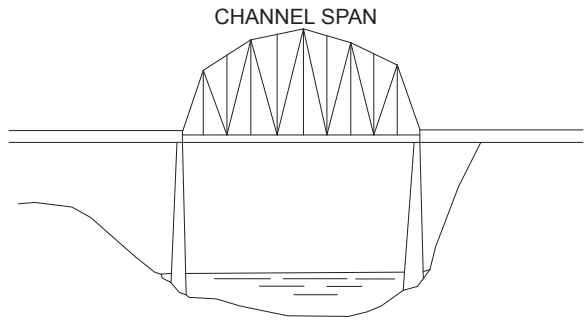

NORFOLK SOUTHERN RAILWAY BRIDGE

NOT TO SCALE
RIVER MILE 248.6

Elevation of Low Steel	140.0'
Vertical Clearance at Normal Pool	67.0'
Vertical Clearance at 1% Duration Flood	40.0'
Horizontal Clearance	300.0'

ALABAMA
LEFT DESCENDING
BANK

2

ALABAMA
RIGHT DESCENDING
BANK

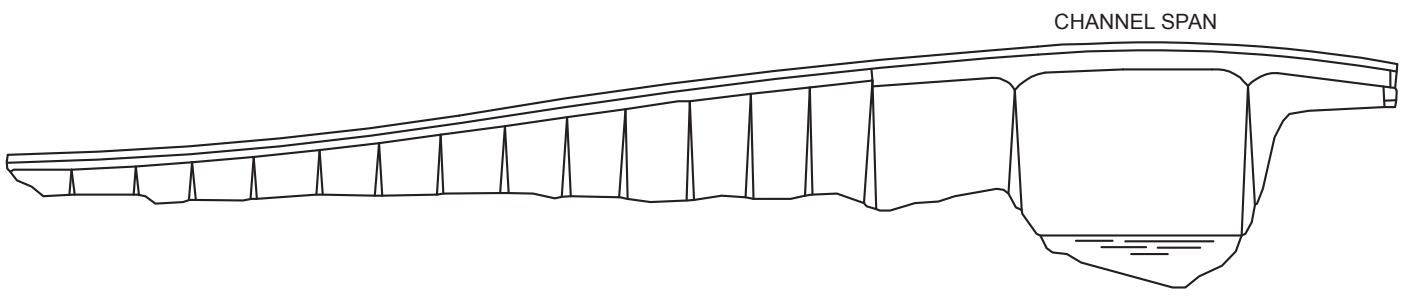

WILLIAM C. GORGAS (U. S. 11) HIGWAY BRIDGE

NOT TO SCALE
RIVER MILE 248.4

Elevation of Low Steel	149.5'
Vertical Clearance at Normal Pool	76.5'
Vertical Clearance at 1% Duration Flood	48.5'
Horizontal Clearance	300.0'

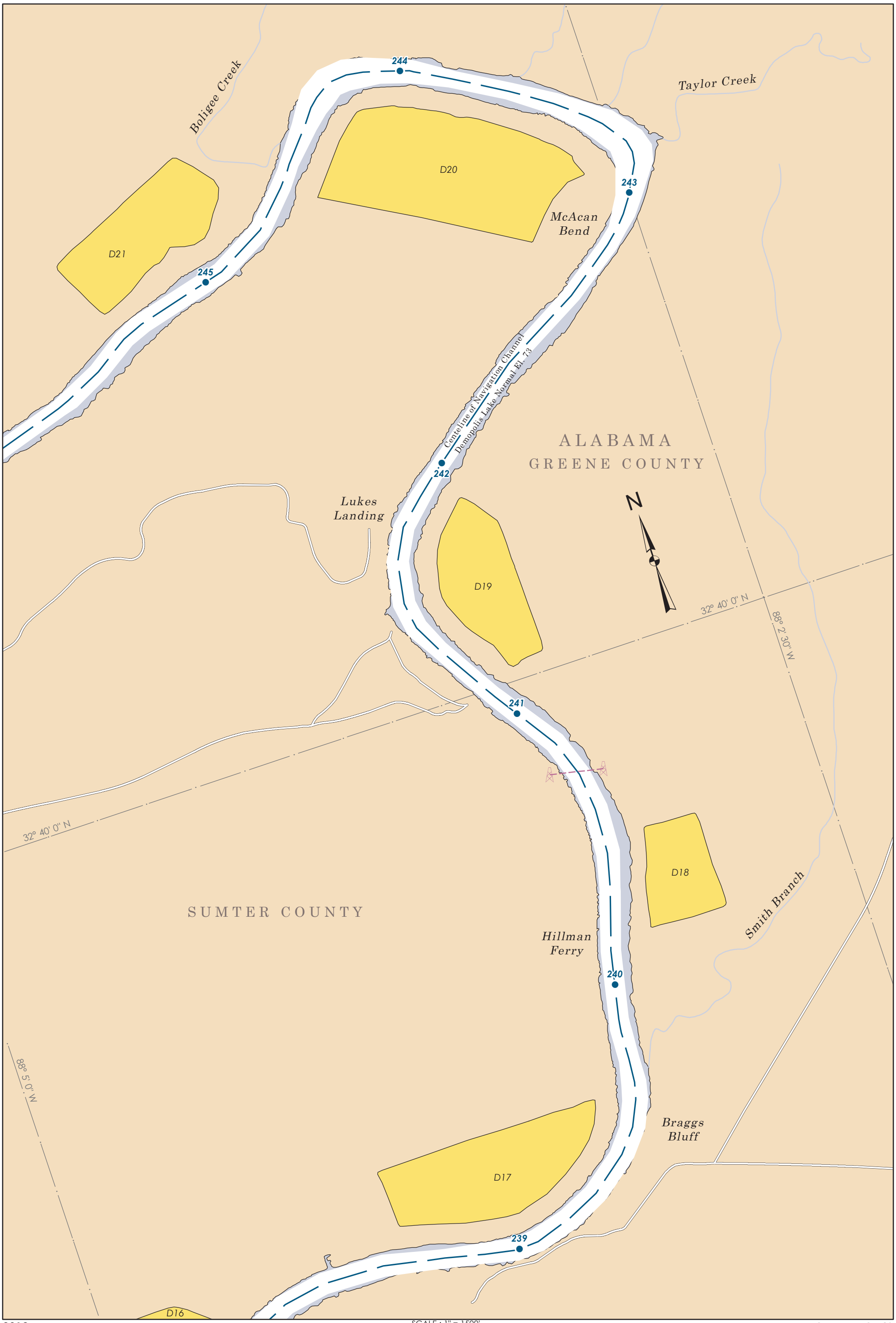

SCALE : 1" = 1500'

0.5 0 0.5 1 Miles

CHART NO. 49
NAVIGATION MILE 239 - 245

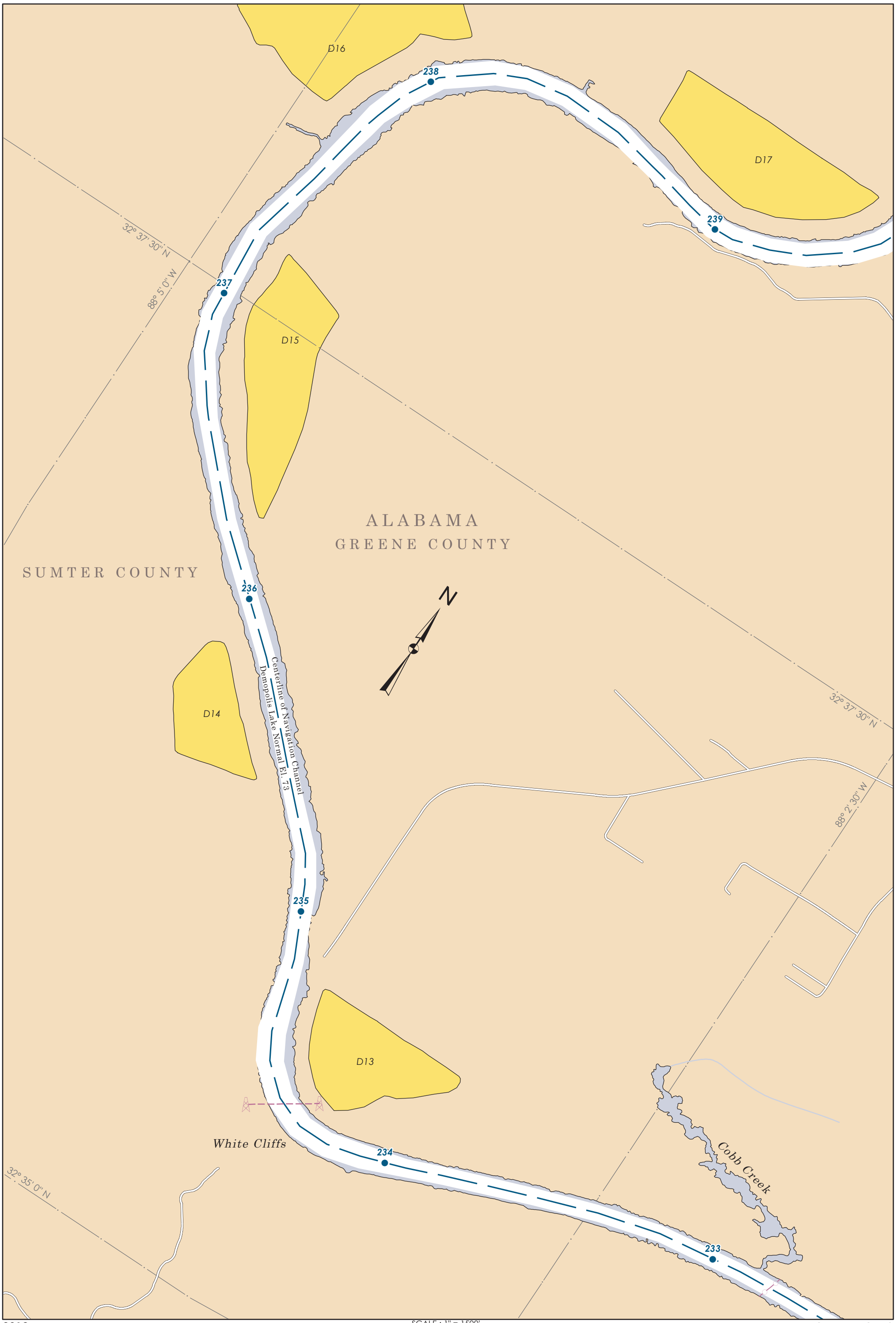

SCALE : 1" = 1500'

0.5 0 0.5 1 Miles

CHART NO. 50
NAVIGATION MILE 233 - 239

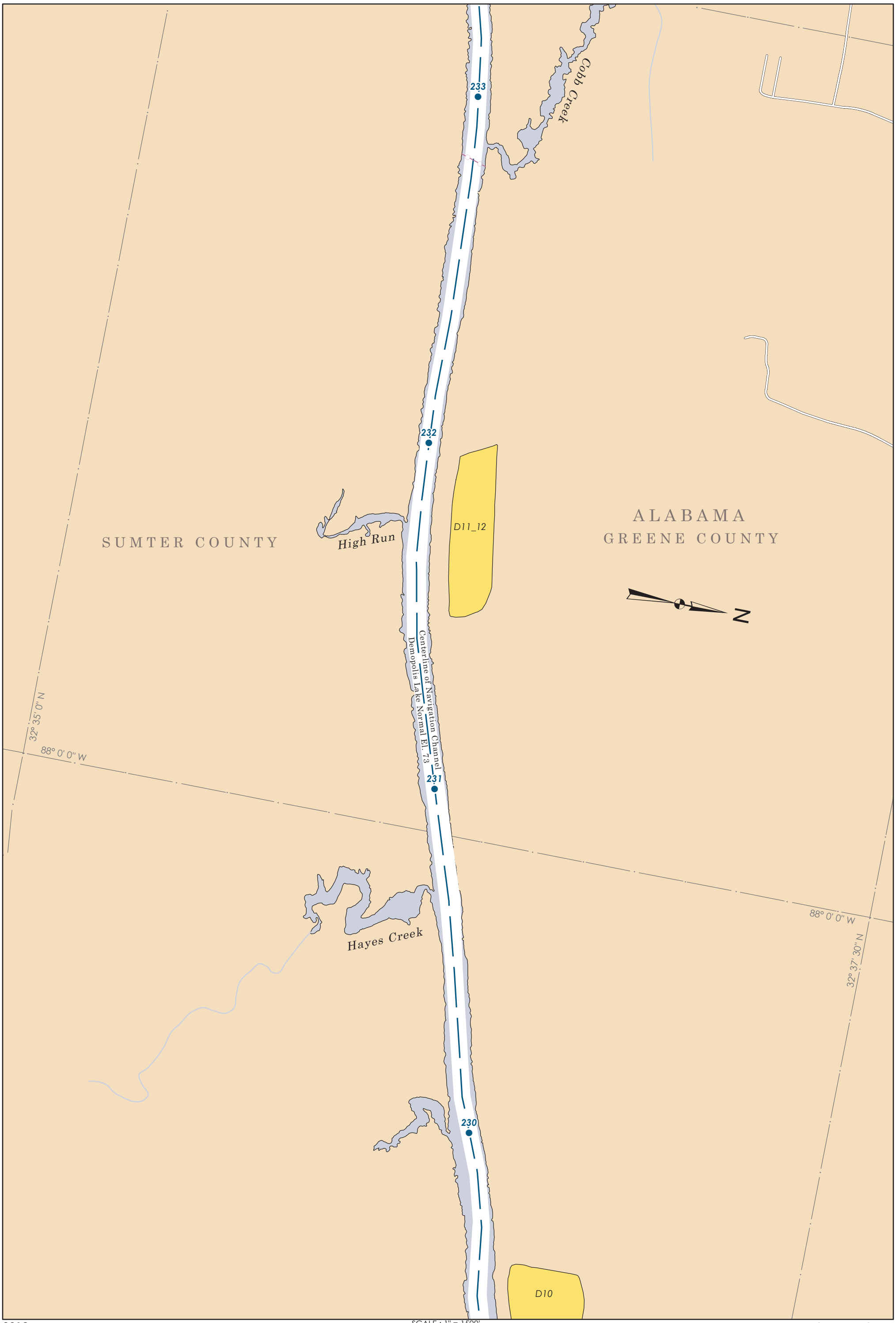

SCALE : 1" = 1500'

0.5 0 0.5 1 Miles

CHART NO. 51
NAVIGATION MILE 230 - 233

SCALE : 1" = 1500'

0.5 0 0.5 1 Miles

CHART NO. 52
NAVIGATION MILE 226 - 229

227
226
D07
Centerline of Navigation Channel
Demopolis Lake Normal El. 73
32° 37' 30" N
87° 55' 0" W
225
GREENE COUNTY
D06
ALABAMA
SUMTER COUNTY
N
224
Rattlesnake Bend
Cut-Off
D05
87° 55' 0" W
223
32° 35' 0" N
D04
87° 52' 30" W
222

SCALE : 1" = 1500'

0.5 0 0.5 1 Miles

CHART NO. 53
NAVIGATION MILE 222 - 226

222
Centerline of Navigation Channel
Demopolis Lake Normal El. 73
32° 35' 0" N
87° 52' 30" W
11
ALABAMA
SUMTER COUNTY
N
221
220
GREENE COUNTY
D03
Belmont Park
Boat Ramp
219
32° 32' 30" N
87° 52' 30" W
D02
218
River

SCALE : 1" = 1500'

0.5 0 0.5 1 Miles