SCALE : 1" = 1500'

0.5 0 0.5 1 Miles

CHART NO. 21
NAVIGATION MILE 368 - 371

MISSISSIPPI LEFT DESCENDING BANK

1

MISSISSIPPI RIGHT DESCENDING BANK

CHANNEL SPAN

MISSISSIPPI HIGHWAY 6 BRIDGE

NOT TO SCALE
RIVER MILE 370.1

Elevation of Low Steel	243.41'
Vertical Clearance at Normal Pool	53.41'
Vertical Clearance at 1% Duration Flood	45.41'
Horizontal Clearance	300.00'

MISSISSIPPI LEFT DESCENDING BANK

2

MISSISSIPPI RIGHT DESCENDING BANK

CHANNEL SPAN

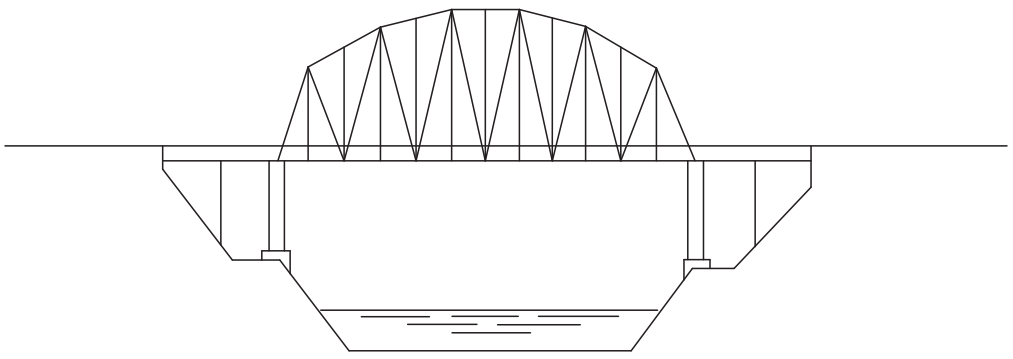

BURLINGTON NORTHERN SANTA FE RAILROAD BRIDGE

NOT TO SCALE
RIVER MILE 369.9

Elevation of Low Steel	242.0'
Vertical Clearance at Normal Pool	52.0'
Vertical Clearance at 1% Duration Flood	41.8'
Horizontal Clearance	300.0'

MISSISSIPPI LEFT DESCENDING BANK

3

MISSISSIPPI RIGHT DESCENDING BANK

CHANNEL SPAN

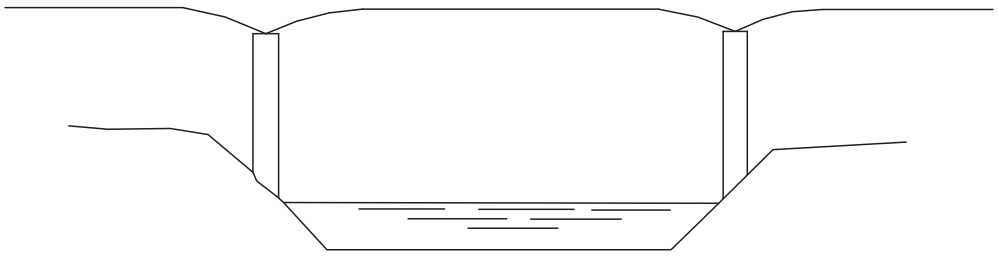

U. S. HIGHWAY 278 BRIDGE

NOT TO SCALE
RIVER MILE 368.4

Elevation of Low Steel	243.43'
Vertical Clearance at Normal Pool	53.43'
Vertical Clearance at 1% Duration Flood	45.43'
Horizontal Clearance	300.00'

368
367
366
365
364
Centerline of Navigation Channel
Aberdeen Lake Normal El. 190
AB13
AB12
AB11
AB10
AB09
AB08
Roundhouse Branch
Roundhouse Branch Cut-Off
Tombigbee River
Becker Cut-Off
Weaver Creek Cut-Off
Weaver Creek
Becker Bottom Boat Ramp
88° 32' 30" W
33° 57' 30" N
33° 55' 0" N
MISSISSIPPI
MONROE COUNTY
N

2012

SCALE : 1" = 1500'

0.5 0 0.5 1 Miles

CHART NO. 22
NAVIGATION MILE 364 - 368

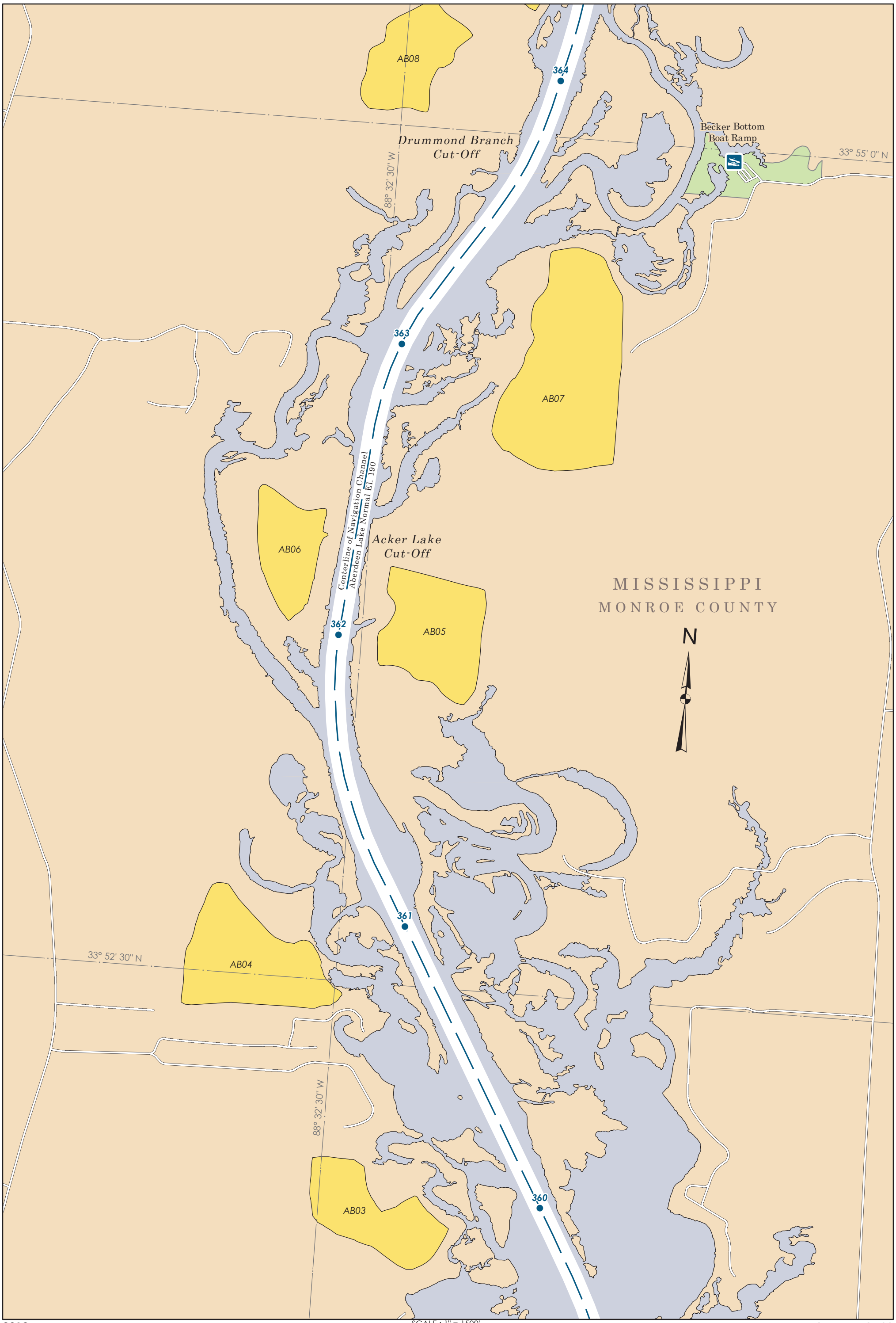
AB08
364
Drummond Branch
Cut-Off
88° 32' 30" W
Becker Bottom
Boat Ramp
33° 55' 0" N
363
AB07
Centerline of Navigation Channel
Aberdeen Lake Normal El. 190
AB06
Acker Lake
Cut-Off
MISSISSIPPI
MONROE COUNTY
362
AB05
N
361
33° 52' 30" N
AB04
88° 32' 30" W
360
AB03

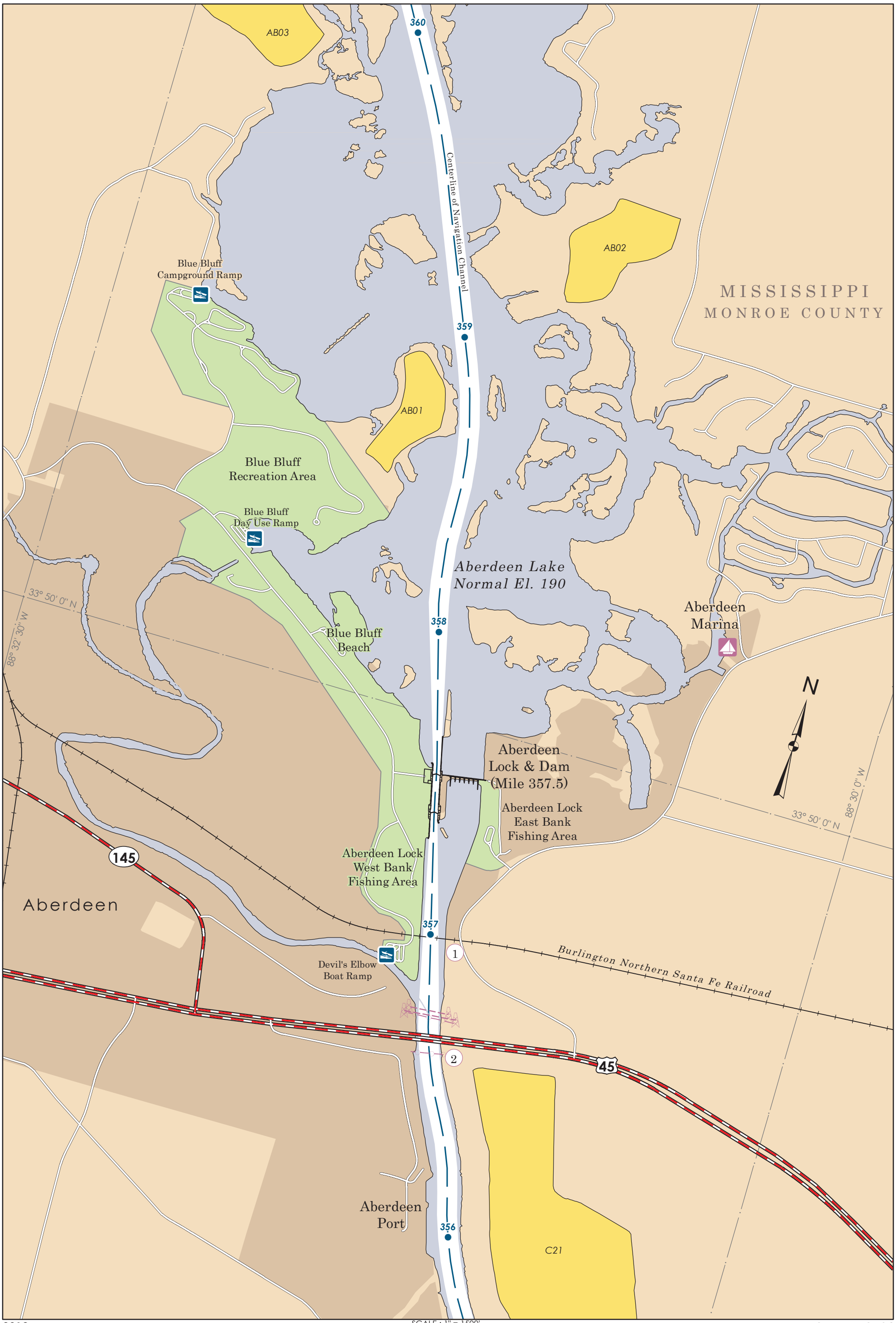
AB03
360
Centerline of Navigation Channel
AB02
MISSISSIPPI
MONROE COUNTY
Blue Bluff
Campground Ramp
359
AB01
Blue Bluff
Recreation Area
Blue Bluff
Day Use Ramp
Aberdeen Lake
Normal El. 190
33° 50' 0" N
88° 32' 30" W
358
Blue Bluff
Beach
Aberdeen
Marina
N
Aberdeen
Lock & Dam
(Mile 357.5)
Aberdeen Lock
East Bank
Fishing Area
88° 30' 0" W
33° 50' 0" N
145
Aberdeen Lock
West Bank
Fishing Area
Aberdeen
357
1
Devil's Elbow
Boat Ramp
Burlington Northern Santa Fe Railroad
2
45
Aberdeen
Port
356
C21

MISSISSIPPI
LEFT DESCENDING
BANK

1

MISSISSIPPI
RIGHT DESCENDING
BANK

CHANNEL SPAN

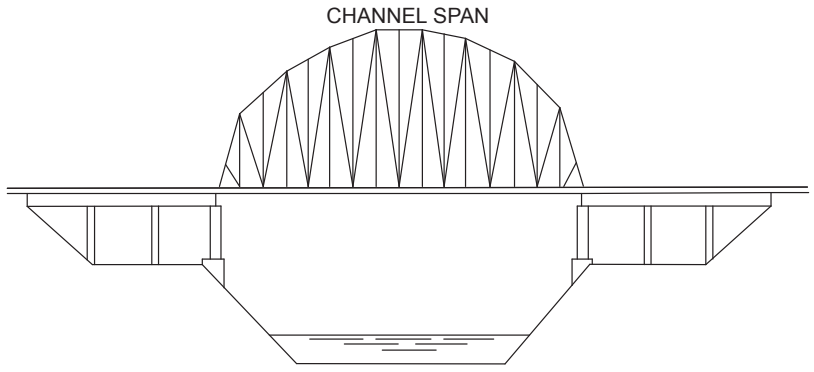

BURLINGTON NORTHERN SANTA FE RAILROAD BRIDGE

NOT TO SCALE
RIVER MILE 357.0

Elevation of Low Steel	232.5'
Vertical Clearance at Normal Pool	69.5'
Vertical Clearance at 1% Duration Flood	40.0'
Horizontal Clearance	300.0'

MISSISSIPPI
LEFT DESCENDING
BANK

2

MISSISSIPPI
RIGHT DESCENDING
BANK

CHANNEL SPAN

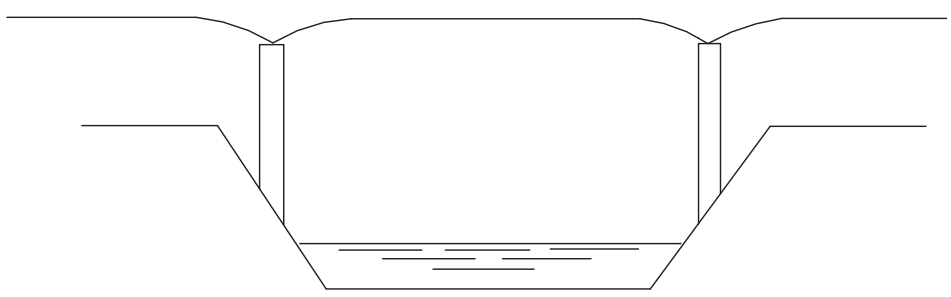

U. S. HIGHWAY 45 TWIN BRIDGES

NOT TO SCALE
RIVER MILE 356.5

Elevation of Low Steel	233.63'
Vertical Clearance at Normal Pool	70.63'
Vertical Clearance at 1% Duration Flood	40.00'
Horizontal Clearance	300.00'