DEPARTMENT OF THE ARMY
U.S. ARMY ENGINEER DISTRICT, MOBILE
CORPS OF ENGINEERS
P.O. BOX 2288
MOBILE, ALABAMA 36628-0001

REPLY TO
ATTENTION OF:

CESAM-RD
PUBLIC NOTICE NO. SAM-2008-0364-JEB

MAY 2 2008

JOINT PUBLIC NOTICE
U.S. ARMY CORPS OF ENGINEERS
AND
STATE OF ALABAMA
DEPARTMENT OF ENVIRONMENTAL MANAGEMENT

FILL 8.02 ACRES OF WETLANDS FOR EXPANSION OF RUNWAYS AT MIDDLETON FIELD AIRPORT, EVERGREEN, CONECUH COUNTY,ALABAMA

TO WHOM IT MAY CONCERN:

This District has received an application for a Department of the Army permit pursuant to Section 10 of the River and Harbor Act of 1899 (33 USC 403), and Section 404 of the Clean Water Act (33 USC 1344). Please communicate this information to interested parties.

APPLICANT: Leaf A. Ballast, P.E. LCDR, CEC, USN
Public Works Officer
NAS Whiting Field
7077 USS Lexington Court
Milton, Florida 32570-6016

WATERWAY: Unnamed wetland drains to Autrey Creek, Sections 10 and 11, Township 5 North, Range 10 East, Evergreen, Conecuh County, Alabama.

WORK: The applicant requests authorization for filling 8.02 acres of wetlands for the expansion of existing runways at Middleton Field Airport. The fill will be placed at the approach end of runways 28 and 1. As mitigation for project impacts, the applicant proposes the purchase of appropriate mitigation credits from a local mitigation bank.

The applicant has applied for certification from the State of Alabama in accordance with Section 401(a)(1) of the Clean Water Act, and upon completion of the required advertising, a determination relative to certification will be made.

This public notice is being distributed to all known interested persons in order to assist in developing facts on which a decision by the U.S. Army Corps of Engineers (Corps) can be based. For accuracy and completeness of the record, all data in support of or in opposition to the proposed work should be submitted in writing setting forth sufficient detail to furnish a clear understanding of the reasons for support or opposition. The decision whether to issue a permit will be based on an evaluation of the probable impact, including cumulative impacts, of the proposed activity on the public interest. That decision will reflect the national concern for both protection and utilization of important resources. The benefit which reasonably may be expected to accrue from the proposal must be balanced against its reasonably foreseeable detriments. All factors which may be relevant to the proposal will be considered, including the cumulative effects thereof; among those are conservation, economics, aesthetics, general environmental concerns, wetlands, cultural values, fish and wildlife values, flood hazards, flood plain values, land use, navigation, shoreline erosion and accretion, recreation, water supply and conservation, water quality, energy needs, safety, food production, and in general, the needs and welfare of the people.

The Corps is soliciting comments from the public; Federal, State, and local agencies and officials; Indian Tribes; and other interested parties in order to consider and evaluate the impacts of this proposed activity. Any comments received will be considered by the Corps to determine whether to issue, modify, condition or deny a permit for this proposal. To make this decision, comments are used to assess impacts on endangered species, historic properties, water quality, general environmental effects, and the other public interest factors listed above. Comments are used in the preparation of an Environmental Assessment and/or an Environmental Impact Statement pursuant to the National Environmental Policy Act. Comments are also used to determine the need for a public hearing and to determine the overall public interest of the proposed activity.

Any person may request, in writing, within the comment period specified in this notice, that a public hearing be held to consider this application. Requests for public hearings shall state with particularity, the reasons for holding a public hearing.

Evaluation of the probable impacts involving deposits of dredged or fill material into waters of the United States will include the application of guidelines established by the Administrator of the U.S. Environmental Protection Agency.

The National Register of Historic Places has been consulted and no properties listed in or eligible for the National Register are known to exist which would be affected by the proposed work. This review constitutes the full extent of cultural resources investigations unless comment to this notice is received documenting that significant sites or properties exist which may be affected by this work, or that adequately documents that a potential

exists for the location of significant sites or properties within the permit area. Copies of this notice are being sent to the U.S. Department of the Interior, National Park Service, Division of Archeological Services.
Preliminary review of this application and the U.S. Department of the Interior List of Endangered and Threatened Wildlife and Plants indicates that the proposed activity will not affect listed endangered or threatened species, or their critical habitat.

Correspondence concerning this Public Notice should refer to Public Notice Number **SAM-2008-0364-JEB** and should be directed to the District Engineer, U.S. Army Engineer District, Mobile, Post Office Box 2288, Mobile, Alabama 36628-0001, Attention: Regulatory Division, with a copy to the Alabama Department of Environmental Management, 4171 Commanders Drive, Mobile, Alabama 36615, (If not in coastal zone: Post Office Box 301463, Montgomery, Alabama 36130-1463). Comments should be received no later than 30 days from the date of this Public Notice.

If you have any questions concerning this publication, you may contact this office, **Mr. Eric Buckelew**, telephone number **251-690-3184**. Please refer to the above Public Notice number.

For additional information about our Regulatory Program, please visit our web site at www.sam.usace.army.mil/RD/reg, and please take a moment to complete our customer satisfaction survey while you're there. Your responses are appreciated and will allow us to improve our services.

MOBILE DISTRICT
U.S. Army Corps of Engineers

Enclosures

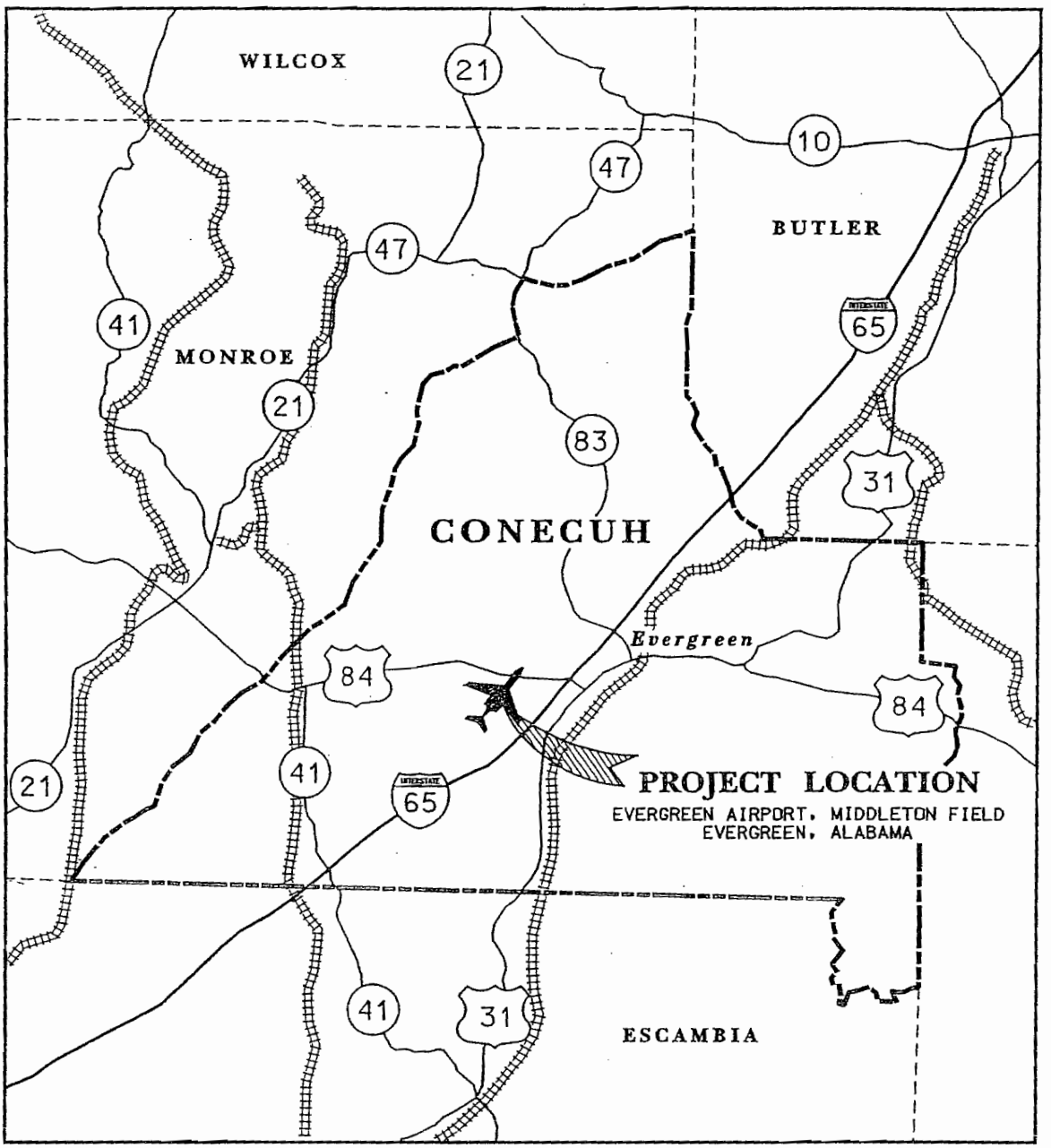

LEGEND

65 INTERSTATE

59 STATE

98 UNITED STATES

N

BWSC BARGE WAGGONER SUMNER & CANNON, INC.

ENGINEERS PLANNERS AND SURVEYORS

2047 West Main Street, Suite 1, P.O. Box 279 (zip 36302), Dothan, Alabama 36301
PHONE (334) 793-6266 FAX (334) 793-4458

LOCATION MAP

EVERGREEN AIRPORT, MIDDLETON FIELD
EVERGREEN, ALABAMA

DRAWN BY:	CHECKED BY:
TAH	DKS
DRAWING NO.: 2	
PROJECT NO.: 17029-13	DATE: 03/14/05

©Copyright 2005, Barge Waggoner Sumner & Cannon, Inc. All Rights Reserve

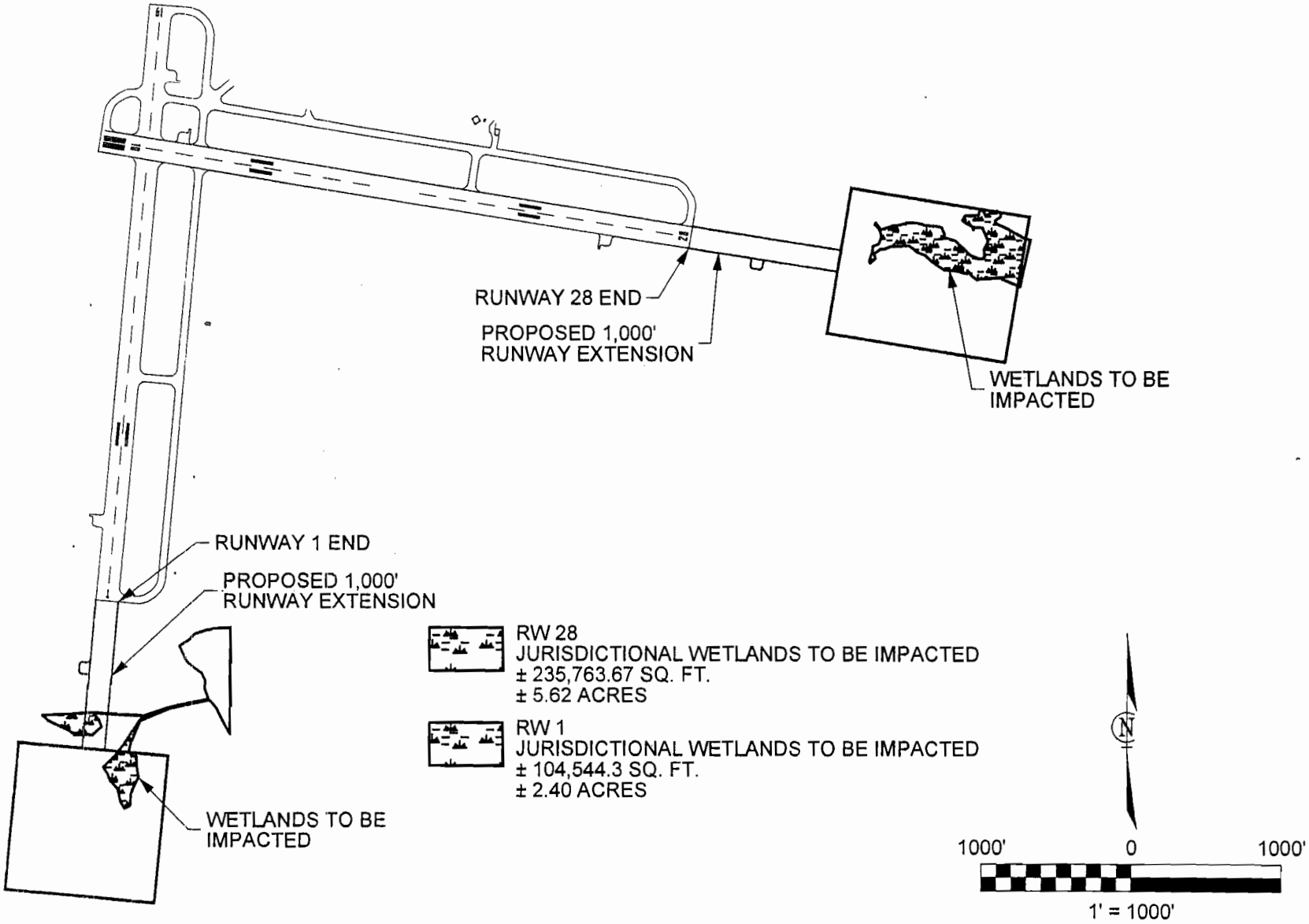

FIG. 1

FILE NO. 3378500

DR.	CHK.	DATE	DESCRIPTION

IMPACTED WETLANDS

IMPROVEMENTS TO RUNWAY 1-19 AND 10-28

MIDDLETON FIELD AIRPORT

EVERGREEN, ALABAMA

PRELIMINARY NOT FOR CONSTRUCTION

DATE

BWSC BARGE WAGGONER SUMNER & CANNON, INC.
ENGINEERS ARCHITECTS PLANNERS
LANDSCAPE ARCHITECTS AND SURVEYORS
2047 West Main Street, Suite 1, Dothan, Alabama 36301
Phone (334) 793-6286 Fax (334) 793-4458

3378500_Figure 1_overall.dgn 4/2/2008 2:11:34 PM

2/13/2008
3:56:24 PM
F:\33\33785\3378500\Wetland Boundary On South End\3378500_im.dgn

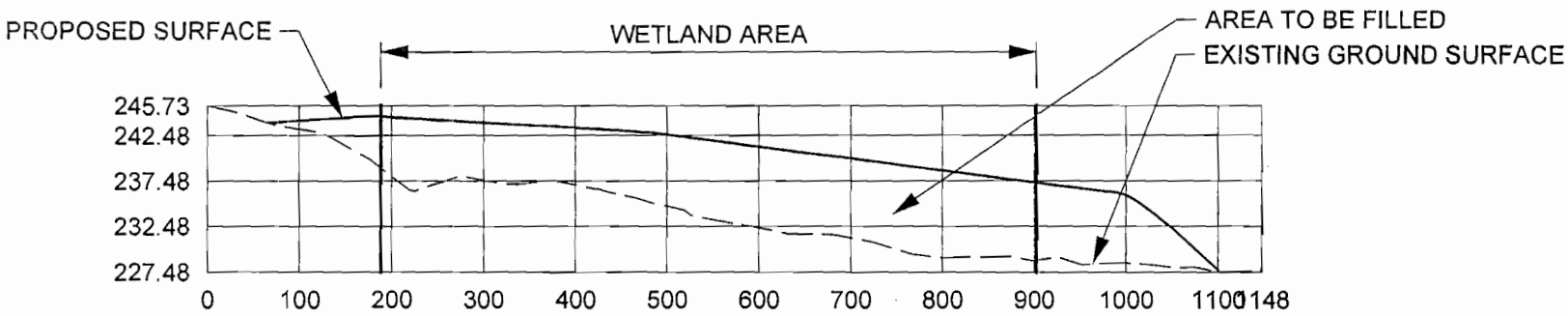

PROFILE VIEW

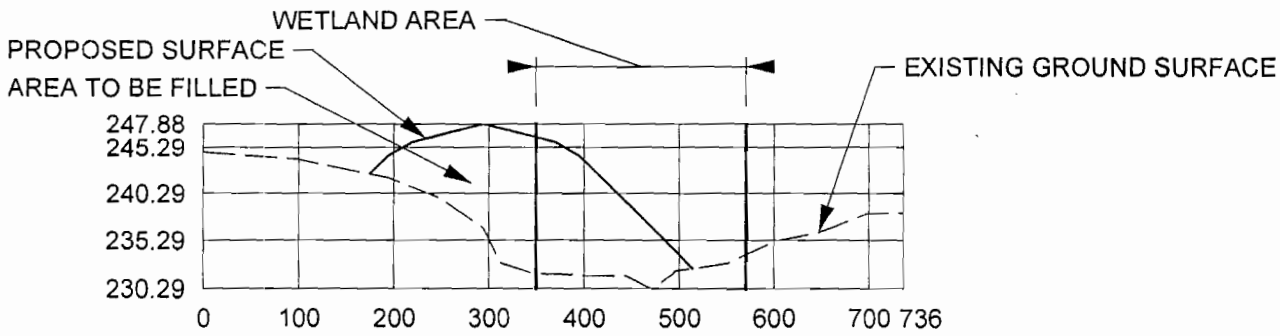

CROSS SECTION
STATION 17+00

DR.	CHK.	DATE	DESCRIPTION

RUNWAY 28 PROFILE AND CROSS SECTION

IMPROVEMENTS TO RUNWAY 1-19 AND 10-28
MIDDLETON FIELD AIRPORT
EVERGREEN, ALABAMA

PRELIMINARY
NOT FOR
CONSTRUCTION

DATE

BWSC
BARGE WAGGONER SUMNER & CANNON, INC.
ENGINEERS ARCHITECTS PLANNERS
LANDSCAPE ARCHITECTS AND SURVEYORS
2047 West Main Street, Suite 1, Dothan, Alabama 36301
Phone (334) 793-6288 Fax (334) 793-4459

FIG. 4
FILE NO. 33785-00

©Copyright 2008, Barge Waggoner Sumner & Cannon, Inc. All Rights Reserved

3378500_Adjacent Prop Owners.dgn 2/18/2008 10:32:33 AM

$DATE$
$TIME$
$FILE$

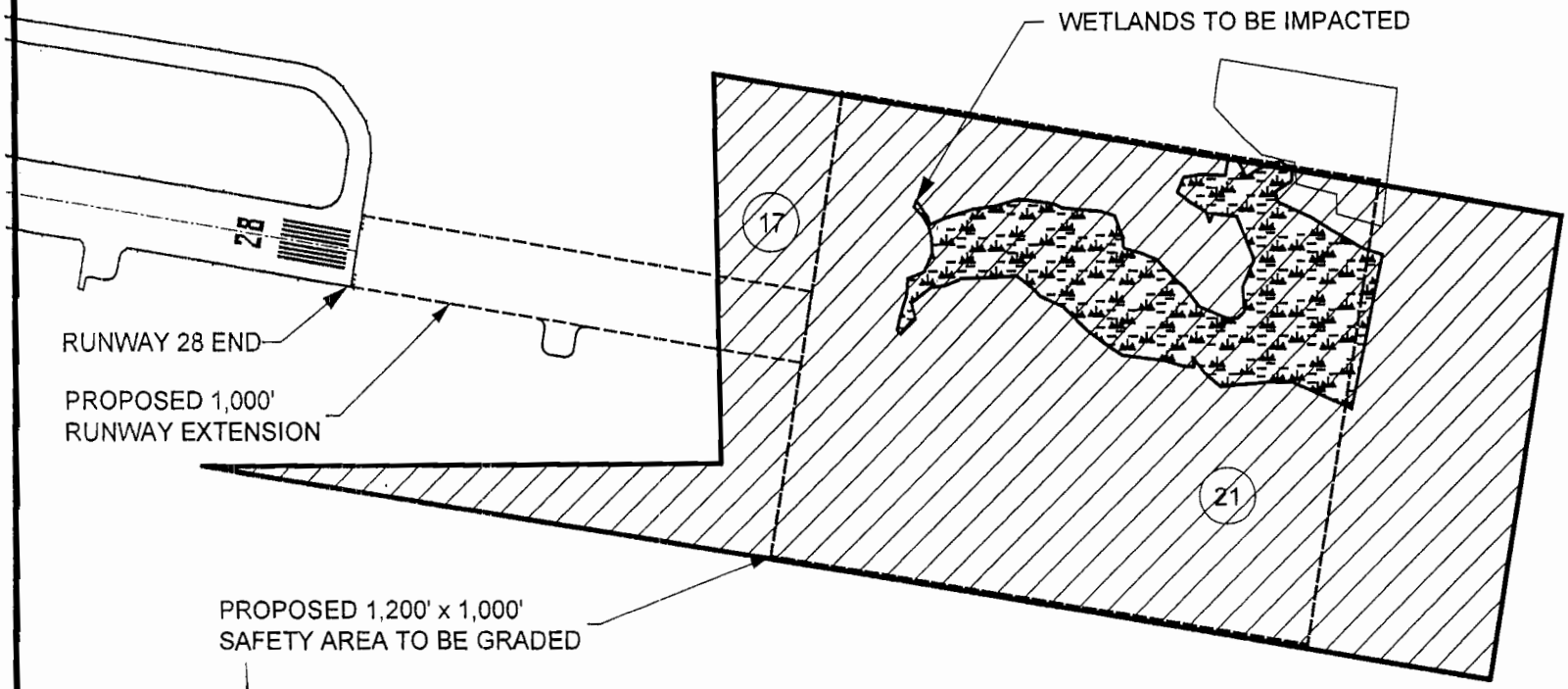

17	NAVY, BUREAU OF YARDS	NAS WHITING FIELD, 7077 USS LEXINGTON COURT, MILTON, FL 32570-6016
21	SUE S. CRANER - ETAL	C/O WADE MORRIS 1570 CROSSWAY DRIVE, ATLANTA, GA 30319

400' 0 400'

1' = 400'

© Copyright 2005, Barge Waggoner Sumner & Cannon, Inc. All Rights Reserved

FIG. 3

FILE NO. 33785-00

DR.	CHK.	DATE	DESCRIPTION

ADJACENT PROPERTY OWNERS - RW 28 EXTENSION

IMPROVEMENTS TO RUNWAY 1-19 AND 10-28

MIDDLETON FIELD AIRPORT

EVERGREEN, ALABAMA

PRELIMINARY
NOT FOR
CONSTRUCTION

DATE

BWSC
BARGE WAGGONER SUMNER & CANNON, INC
ENGINEERS ARCHITECTS PLANNERS
LANDSCAPE ARCHITECTS AND SURVEYORS
2047 West Main Street, Suite 1, Dothan, Alabama 36301
Phone (334) 793-6266 Fax (334) 793-4458

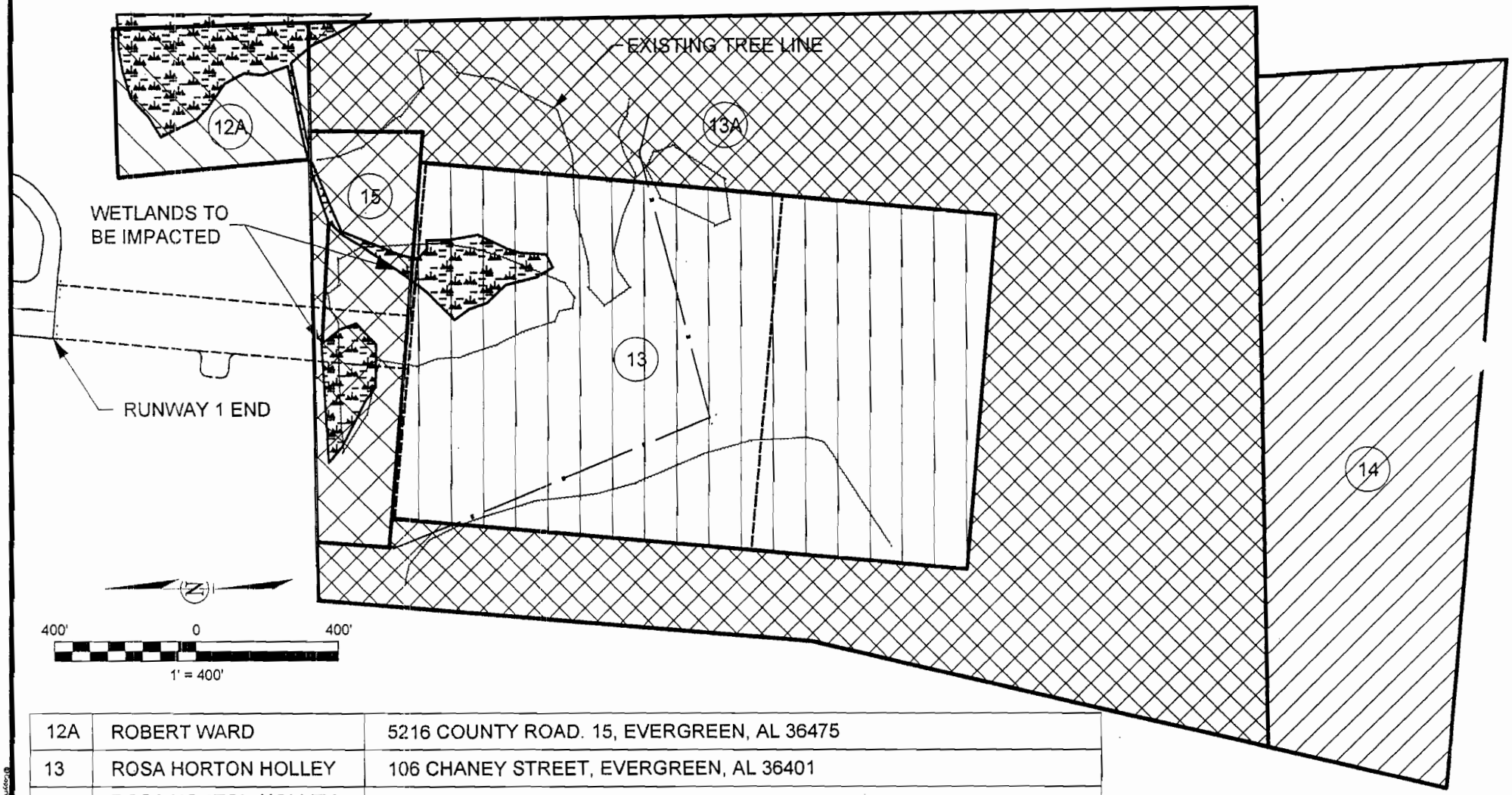

12A	ROBERT WARD	5216 COUNTY ROAD. 15, EVERGREEN, AL 36475
13	ROSA HORTON HOLLEY	106 CHANEY STREET, EVERGREEN, AL 36401
13A	ROSA HORTON HOLLEY	106 CHANEY STREET, EVERGREEN, AL 36401
14	WILLIAM W. WARD	14461 HIGHWAY 84 WEST, EVERGREEN, AL 36475
15	NAVY, BUREAU OF YARDS	NAS WHITING FIELD, 7077 USS LEXINGTON COURT, MILTON, FL 32570-6016

FIG. 1

FILE NO. 33785-00

DR.	CHK.	DATE	DESCRIPTION

ADJACENT PROPERTY OWNERS - RW 1 EXTENSION

IMPROVEMENTS TO RUNWAY 1-19 AND 10-28
MIDDLETON FIELD AIRPORT
EVERGREEN, ALABAMA

PRELIMINARY
NOT FOR
CONSTRUCTION

DATE

BWSC
BARGE WAGGONER SUMNER & CANNON, INC.
ENGINEERS ARCHITECTS PLANNERS
LANDSCAPE ARCHITECTS AND SURVEYORS
2047 West Main Street, Suite 1, Dothan, Alabama 36301
Phone (334) 793-6266 Fax (334) 793-4450

Copyright 2006, Barge Waggoner Sumner & Cannon, Inc. All Rights Reserved

2/13/2008
3:56:46 PM
F:\33\33785\3378500\Wetland Boundary On South End\3378500_lm.dgn

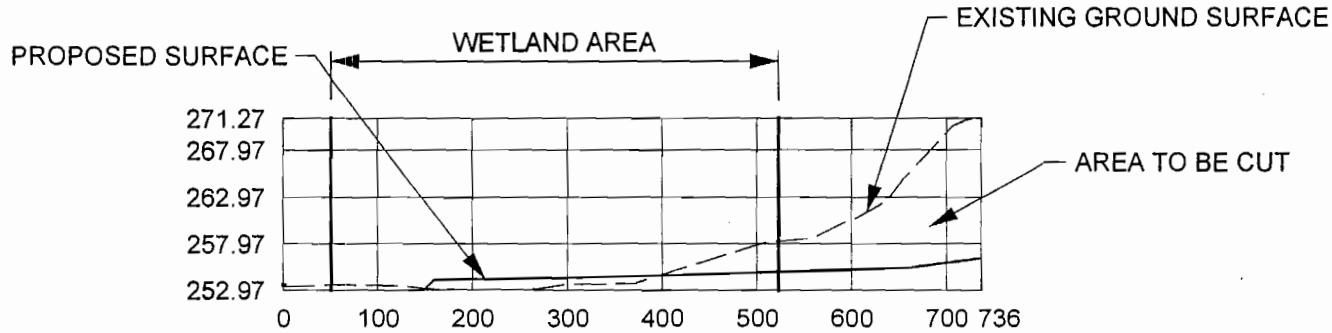

PROFILE VIEW

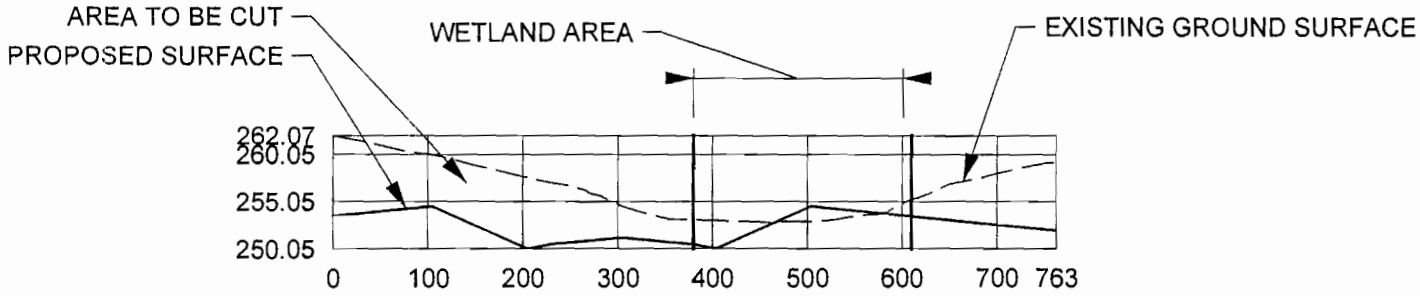

CROSS SECTION
STATION 11+00

Copyright 2005, Barge Waggoner Sumner & Cannon, Inc. All rights reserved

FILE NO. 33785-(

FIG. 2

DR.	CHK	DATE	DESCRIPTION

RUNWAY 1 PROFILE AND CROSS SECTION

IMPROVEMENTS TO RUNWAY 1-19 AND 10-28
MIDDLETON FIELD AIRPORT
EVERGREEN, ALABAMA

PRELIMINARY
NOT FOR
CONSTRUCTION

DATE

BWSC
BARGE WAGGONER SUMNER & CANNON, INC.
ENGINEERS ARCHITECTS PLANNERS
LANDSCAPE ARCHITECTS AND SURVEYORS
2047 West Main Street, Suite 1, Dothan, Alabama 36301
Phone (334) 793-6266 Fax (334) 793-4459

2/13/2008
5:13:41 PM
F:\33\33785\3378500\Wetland Boundary\3378500_Figure 1-4.dgn

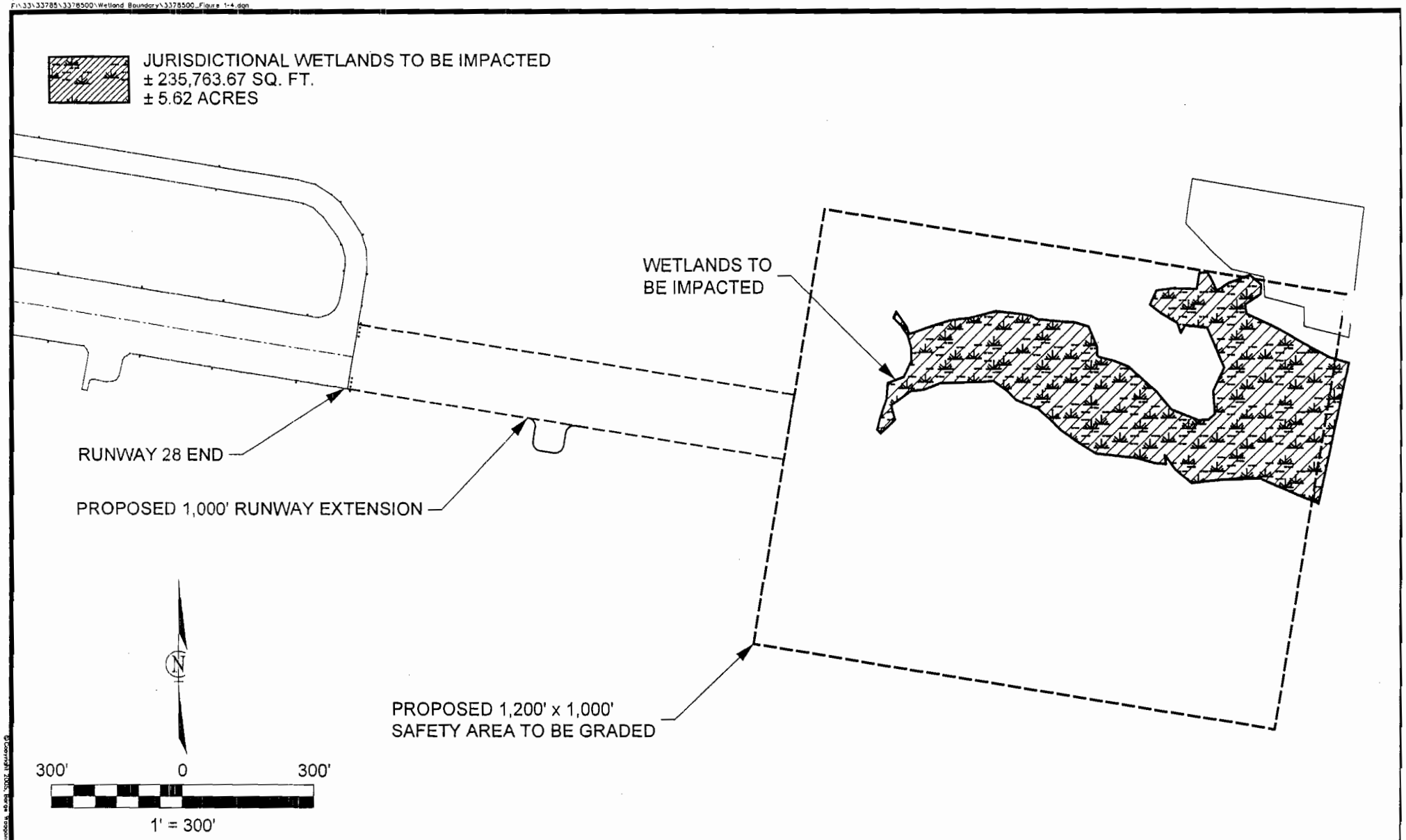

© Copyright 2005, Barge Waggoner Sumner & Cannon, Inc. All Rights Reserved

FIG. 3

FILE NO. 33785-00

DR.	CHK.	DATE	DESCRIPTION

IMPACTED WETLANDS - RUNWAY 28 EXTENSION

IMPROVEMENTS TO RUNWAY 1-19 AND 10-28
MIDDLETON FIELD AIRPORT
EVERGREEN, ALABAMA

PRELIMINARY
NOT FOR
CONSTRUCTION

DATE

BWSC
BARGE WAGGONER SUMNER & CANNON, INC.
ENGINEERS ARCHITECTS PLANNERS
LANDSCAPE ARCHITECTS AND SURVEYORS
2047 West Main Street, Suite 1, Dothan, Alabama 36301
Phone (334) 793-6288 Fax (334) 793-4498