DEPARTMENT OF THE ARMY
U.S. ARMY ENGINEER DISTRICT, MOBILE
CORPS OF ENGINEERS
P.O. BOX 2288
MOBILE, ALABAMA 36628-0001

REPLY TO
ATTENTION OF:

CESAM-RD-C **4 DECEMBER 2008**
PUBLIC NOTICE NO. SAM-2008-1324-JEB

JOINT PUBLIC NOTICE
U.S. ARMY CORPS OF ENGINEERS
AND
STATE OF ALABAMA
DEPARTMENT OF ENVIRONMENTAL MANAGEMENT

CONSTRUCT A 54 ACRE COMMERCIAL BUSINESS PARK BY FILLING 2.86 ACRES OF WETLANDS AND IMPACTING STREAM CHANNELS DRAINING TO GREENWOOD SPRING BRANCH, LOXLEY, BALDWIN COUNTY, ALABAMA

TO WHOM IT MAY CONCERN:

This District of the U. S. Army Corps of Engineers (Corps) has received an application for a Department of the Army permit pursuant to Section 10 of the River and Harbor Act of 1899 (33 USC 403), and Section 404 of the Clean Water Act (33 USC 1344). Please communicate this information to interested parties.

APPLICANT/AGENT: Western Express, Inc.
7135 Centennial Place
Nashville, Tennessee 37209

LOCATION OF WORK: Unnamed wetlands and perennial, intermittent and ephemeral streams draining to Greenwood Spring Branch, Sections 27 and 34, Township 4 South, Range 3 East, 30.66499° N/ 87.75534° W, Loxley, Baldwin County, Alabama.

WATERWAY: Unnamed perennial, intermittent and ephemeral streams draining to Greenwood Spring Branch, Sections 27 and 34, Township 4 South, Range 3 East, 30.66499° N/ 87.75534° W, Loxley, Baldwin County, Alabama.

PROPOSED WORK: The applicant requests authorization to fill 2.86 acres of low quality herbaceous/shrub wetlands for the creation of a commercial business park, to be called the Loxley I-10 Business Park. Additionally, the project proposes to impact 1,229 linear feet of man-made intermittent stream channel by piping through an underground culvert, 111 linear feet of perennial stream channel by piping through a bottomless culvert and 664 linear feet of ephemeral stream channel to be piped through a traditional underground culvert.

The applicant has stated the following concerning avoidance and minimization to Waters of the United States: " The perennial stream segment, Greenwood Spring Branch, located along the east side of lots 15, 16, and 17 is being avoided. The original development plan included deepening and widening this stream channel to accommodate more storm water. However, this plan was modified to detain more storm water on each lot where it will be released at a controlled rate into the stream such that modification of channel is not necessary. Impacts to the perennial stream are being further minimized by installing a bottomless (arch) culvert over the access channel where the road will cross it. It is expected that 2734 square feet of wetlands on the south side of Lot 26 can be avoided when the site is developed in the future. Additionally, the more extensive higher quality wetlands to the south of Lot 17 are being avoided. Wetlands in this area total 233,609 square feet (5.36 acres)." The Corps has not verified the adequacy of the applicants avoidance and minimization statement at this time.

The applicant has stated the following concerning mitigation for unavoidable impacts to Waters of the United States: "The mitigation ratio for low quality wetlands at the Weeks Bay Mitigation Bank is 1.5:1. Therefore, with a total of 2.86 acres of wetland impacts, 4.3 wetland credits will be required. Mitigation is not typically required for ephemeral stream impacts, therefore, none is proposed. A bottomless culvert will be used where the road will cross Greenwood Spring Branch, therefore, no mitigation is proposed for this crossing." The Corps has not verified the adequacy of this mitigation proposal at this time.

The applicant has applied for certification from the State of Alabama in accordance with Section 401(a)(1) of the Clean Water Act, and upon completion of the required advertising, a determination relative to certification will be made.

This public notice is being distributed to all known interested persons in order to assist in developing facts on which a decision by the U.S. Army Corps of Engineers (Corps) can be based. For accuracy and completeness of the record, all data in support of or in opposition to the proposed work should be submitted in writing setting forth sufficient detail to furnish a clear understanding of the reasons for support or opposition. The decision whether to issue a permit will be based on an evaluation of the probable impact, including cumulative impacts, of the proposed activity on the public interest. That decision will reflect the national concern for both protection and utilization of important resources. The benefit which reasonably may be expected to accrue from the proposal must be balanced against its reasonably foreseeable detriments. All factors which may be relevant to the proposal will be considered, including the cumulative effects thereof; among those are conservation, economics, aesthetics, general environmental concerns, wetlands, cultural values, fish and wildlife values, flood hazards, flood plain values, land use, navigation, shoreline erosion and accretion, recreation, water supply and

conservation, water quality, energy needs, safety, food production, and in general, the needs and welfare of the people.

The Corps is soliciting comments from the public; Federal, State, and local agencies and officials; Indian Tribes; and other interested parties in order to consider and evaluate the impacts of this proposed activity. Any comments received will be considered by the Corps to determine whether to issue, modify, condition or deny a permit for this proposal. To make this decision, comments are used to assess impacts on endangered species, historic properties, water quality, general environmental effects, and the other public interest factors listed above. Comments are used in the preparation of an Environmental Assessment and/or an Environmental Impact Statement pursuant to the National Environmental Policy Act. Comments are also used to determine the need for a public hearing and to determine the overall public interest of the proposed activity.

Any person may request, in writing, within the comment period specified in this notice, that a public hearing be held to consider this application. Requests for public hearings shall state with particularity, the reasons for holding a public hearing.

Evaluation of the probable impacts involving deposits of dredged or fill material into waters of the United States will include the application of guidelines established by the Administrator of the U.S. Environmental Protection Agency.

The National Register of Historic Places will be consulted for properties listed in or eligible for the National Register which are known to exist and would be affected by the proposed work. Additional notification will be furnished to the State Historic Preservation Officer via this Public Notice. This review constitutes the full extent of cultural resources investigations unless comment to this notice is received documenting that significant sites or properties exist which may be affected by this work, or that adequately documents that a potential exists for the location of significant sites or properties within the permit area. Copies of this notice are being sent to the U.S. Department of the Interior, National Park Service, Division of Archeological Services.

Preliminary review of this application and the U.S. Department of the Interior List of Endangered and Threatened Wildlife and Plants indicates that listed endangered and threatened species or their critical habitat may occur within the project area. Notification to the United States Fish and Wildlife Service will be furnished via this Public Notice.

Correspondence concerning this Public Notice should refer to Public Notice Number **SAM-2008-1324-JEB** and should be directed to the District Engineer, U.S. Army Engineer District, Mobile, Post Office Box 2288, Mobile, Alabama 36628-0001, Attention: Regulatory Division, with a copy to the Alabama Department of Environmental Management, 4171 Commanders Drive, Mobile, Alabama 36615,

(If not in coastal zone: Post Office Box 301463, Montgomery, Alabama 36130-1463). Comments should be received no later than 30 days from the date of this Public Notice.

If you have any questions concerning this publication, you may contact this office, **Mr. Eric Buckelew**, telephone number **251-690-3184, e-mail james.e. buckelew@usace.army.mil**. Please refer to the above Public Notice number.

For additional information about our Regulatory Program, please visit our web site at www.sam.usace.army.mil/RD/reg, and please take a moment to complete our customer satisfaction survey while you're there. Your responses are appreciated and will allow us to improve our services.

MOBILE DISTRICT
U.S. Army Corps of Engineers

Enclosures

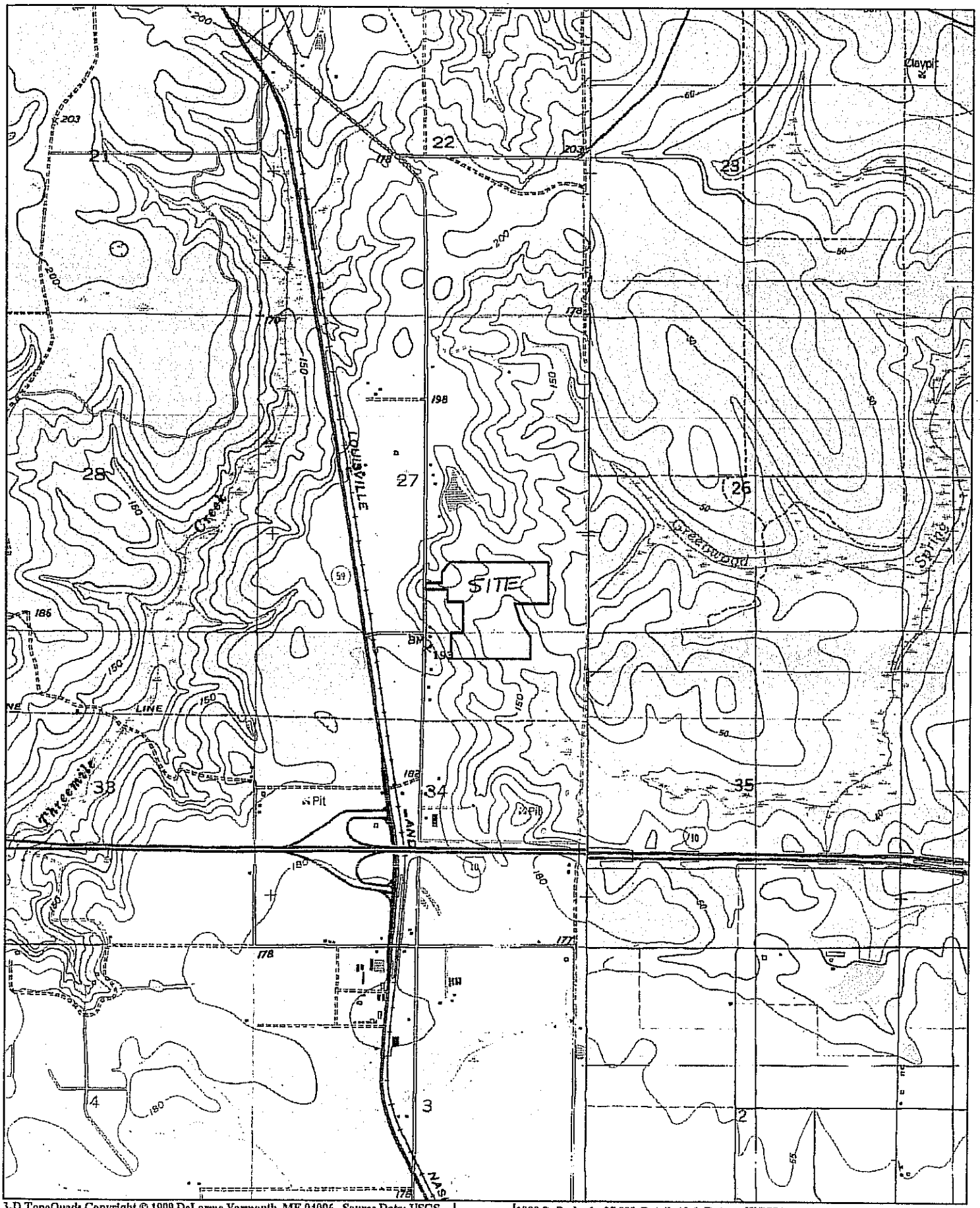

3-D TopoQuads Copyright © 1999 DeLorme Yarmouth, ME 04096 Source Data: USGS 1000 ft Scale: 1 : 25,000 Detail: 13-0 Datum: WGS84

TWP.4S-RNG.3E - SOUTHEAST

BALDWIN COUNTY, ALABAMA (LOCATOR 33)

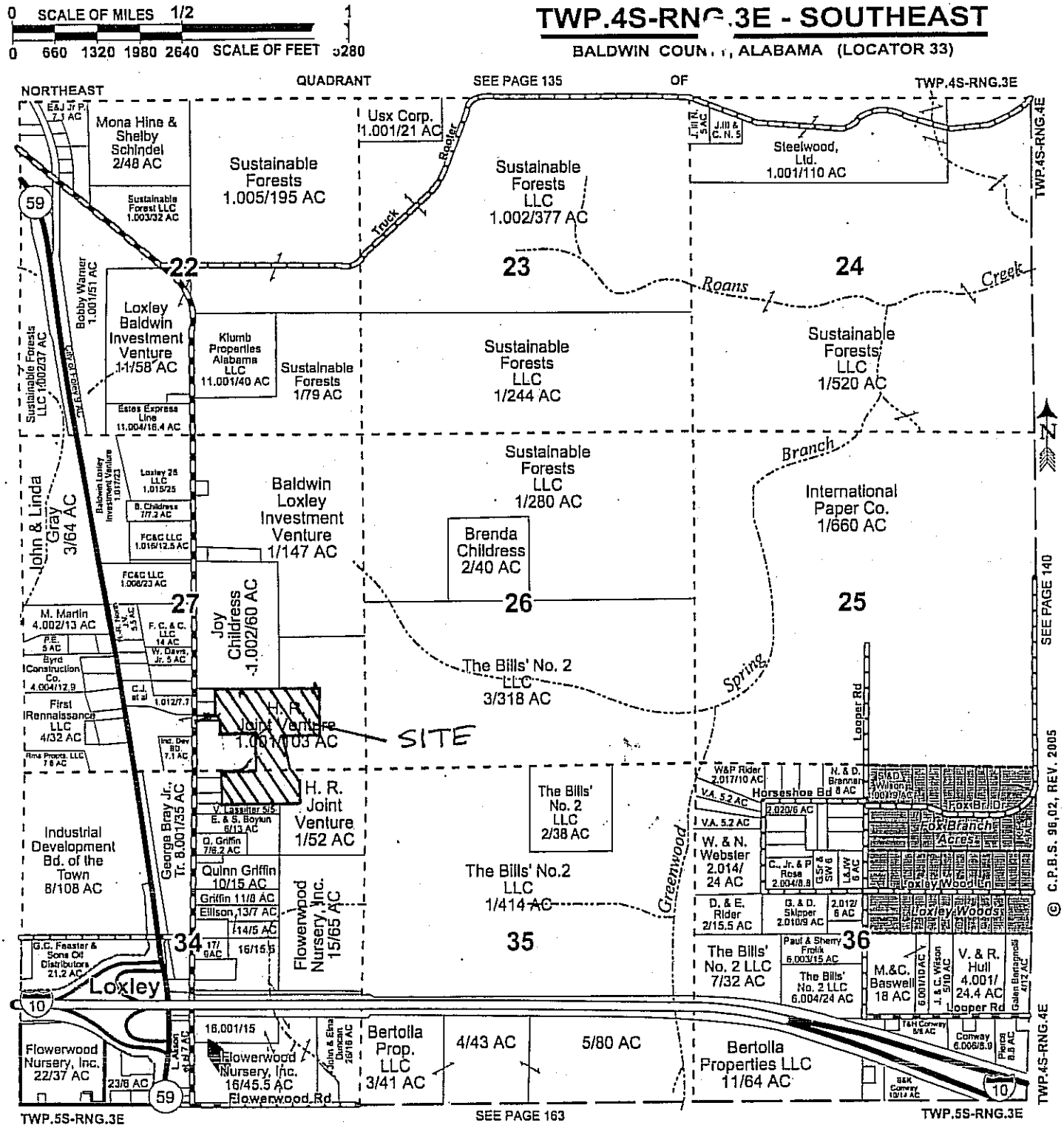

WETLAND DELINEATION MAP

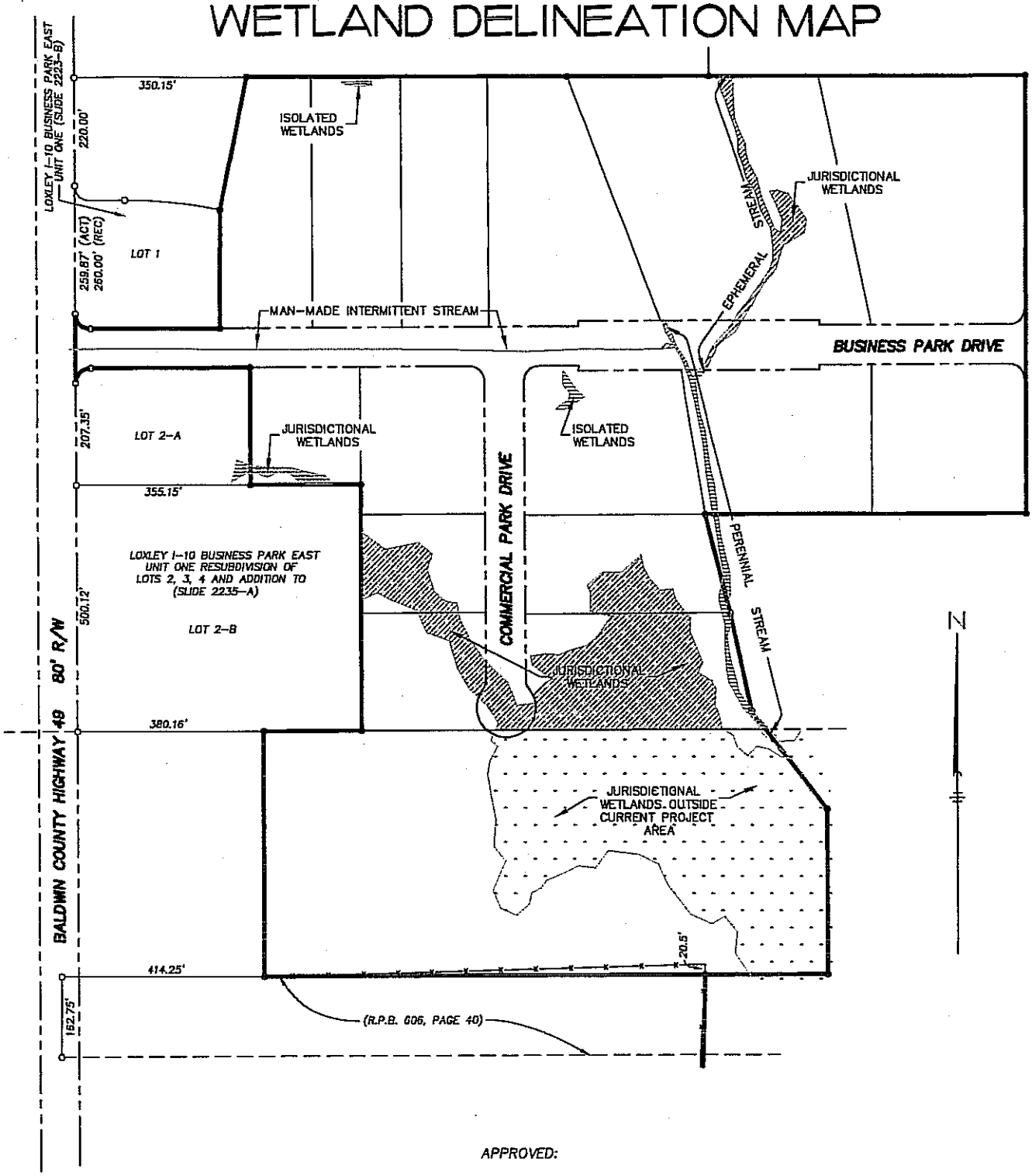

APPROVED:

Date: _____

Donald W. Rowe, PLS
Alabama Licensed Professional Land Surveyor
Registration No. 9359-S

ROWE SURVEYING AND ENGINEERING COMPANY, INC.
CONSULTING ENGINEERS
CA-00033-LS
3755 COTTAGE HILL ROAD MOBILE, ALABAMA 36609
PHONE 251-666-2766 FAX 251-660-1040

ACAD2005: 32422.dwg TDS: SCALE: 1" = 300.0'	JOB: 32422 FB: TAX: 05-33-08 DATE: 06 AUGUST 2008

© COPYRIGHT 2008
ALL RIGHTS RESERVED
ROWE SURVEYING & ENGINEERING CO., INC.

SITE PLAN

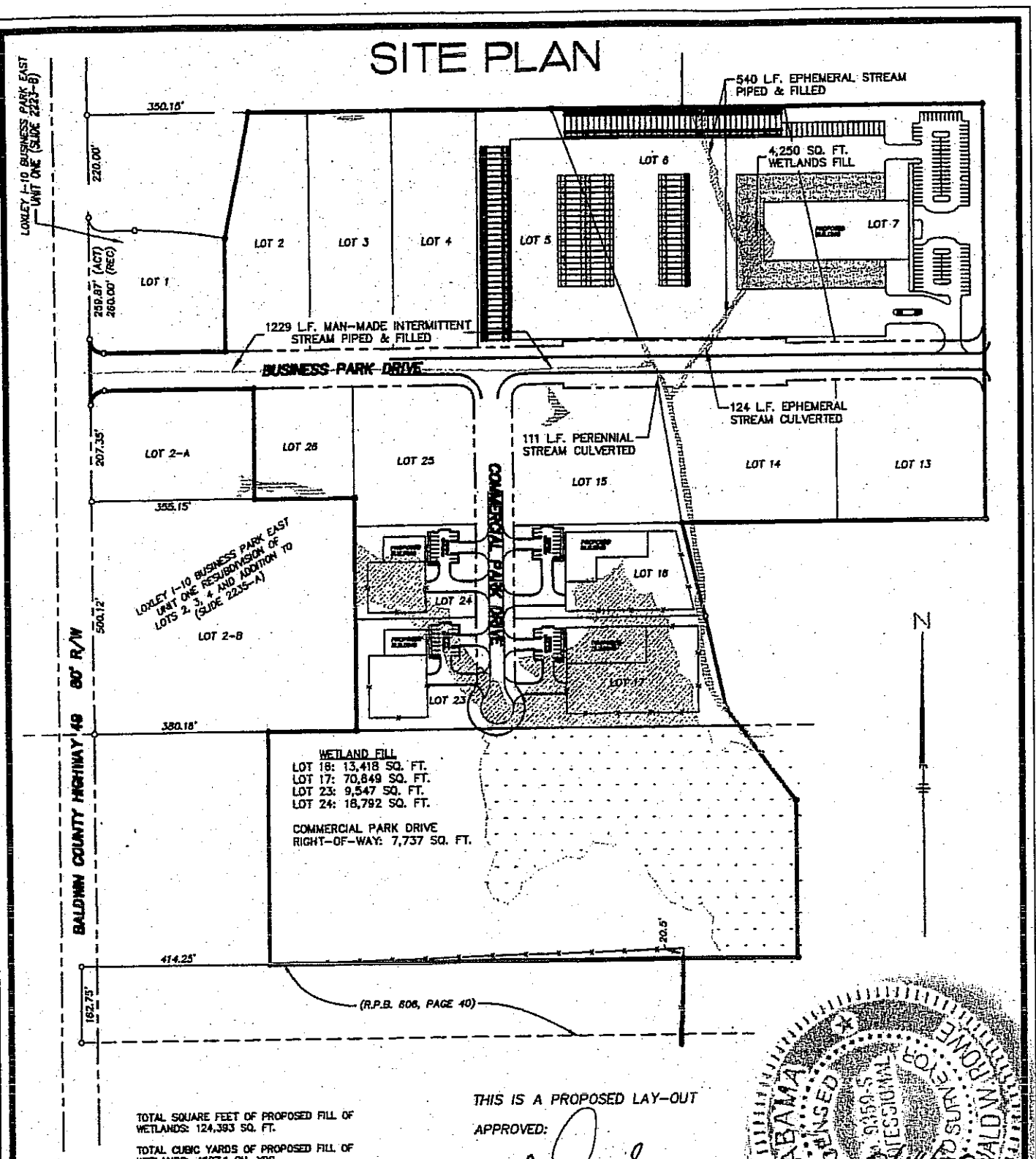

TOTAL SQUARE FEET OF PROPOSED FILL OF WETLANDS: 124,393 SQ. FT.

TOTAL CUBIC YARDS OF PROPOSED FILL OF WETLANDS: 4607.1 CU. YDS.

LINEAR FEET OF STREAM CHANNELS TO BE PIPED
EPHEMERAL: 664 L.F.
INTERMITTENT: 1229 L.F.
PERENNIAL: 111 L.F.

THIS IS A PROPOSED LAY-OUT

APPROVED:

Donald W. Rowe, PLS
Alabama Licensed Professional Land Surveyor
Registration No. 9359-S

Date: 8/14/08

ALABAMA LICENSED PROFESSIONAL LAND SURVEYOR 9359-S DONALD W. ROWE

ROWE SURVEYING AND ENGINEERING COMPANY, INC.
CONSULTING ENGINEERS
CA-00033-LS
3755 COTTAGE HILL ROAD MOBILE, ALABAMA 36609
PHONE 251-666-2765 FAX 251-660-1040

ACAD2005: 32422.dwg	*JOB: 32422*
TDS:	*FB:*
SCALE: 1" = 300.0'	*TAX: 05-33-08*
	DATE: 06 AUGUST 2008

© COPYRIGHT 2008
ALL RIGHTS RESERVED
ROWE SURVEYING & ENGINEERING CO., INC.

TYPICAL CROSS-SECTION

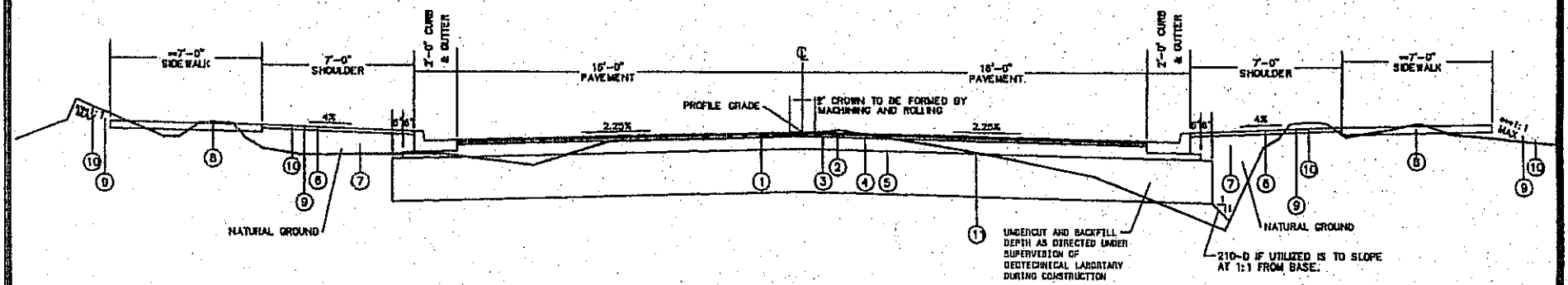

TYPICAL ROADWAY SECTION

NOT TO SCALE

1. 429-A IMPROVED BITUMINOUS CONCRETE WEARING SURFACE LAYER, 0.75" MAXIMUM AGGREGATE SIZE MIX, ESAL RANGE B, 1.5" MIN. COMPACTED THICKNESS, (165 LB/SY)
2. 429-C IMPROVED BITUMINOUS CONCRETE BASE LAYER, 1.25" MAXIMUM AGGREGATE SIZE MIX, ESAL RANGE B, 2.5" MIN. COMPACTED THICKNESS, (275 LB/SY)
3. 401-A BITUMINOUS TREATMENT, TYPE "L"
4. 301-A CRUSHED AGGREGATE BASE COURSE, SECTION 825, ROAD MIXED, 6" COMPACTED THICKNESS
5. 230-A ROADBED PROCESSING
6. 650-A TOPSOIL, 2" COMPACTED THICKNESS, COMPACTED IN PLACE
7. 210-D SUITABLE MATERIAL FROM UNCLASSIFIED EXCAVATION OR BORROW EXCAVATION (TRUCKBED MEASURE)
8. 210-A UNCLASSIFIED EXCAVATION (C.Y.)
9. 652-A SEEDING, MIX 3E
10. 656-A MULCHING, CLASS A, TYPE 1
11. 210-D BORROW EXCAVATION, SELECT BACKFILL (SOIL CLASSIFICATION A-2-4 OR BETTER) (C.Y.T.B.M.)

*** SEE CROSS SECTIONS, TIE IN SLOPES VARY

ROWE SURVEYING AND ENGINEERING COMPANY, INC.
CONSULTING ENGINEERS
CA-00033-LS
3755 COTTAGE HILL ROAD · MOBILE, ALABAMA 36609
PHONE 251-666-2766 FAX 251-660-1040

ACAD2005: 32422.dwg	JOB: 32422
TDS:	FB:
SCALE: NOT TO SCALE	TAX: 05-33-08
	DATE: 08 AUGUST 2008

© COPYRIGHT 2008
ALL RIGHTS RESERVED
ROWE SURVEYING & ENGINEERING CO., INC.

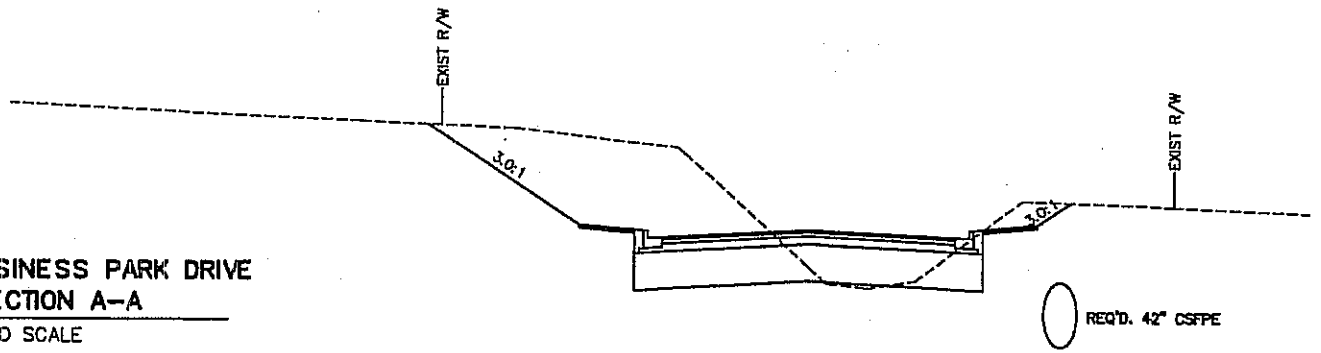

SECTION OF BUSINESS PARK DRIVE
SEE SECTION A–A

NOT TO SCALE

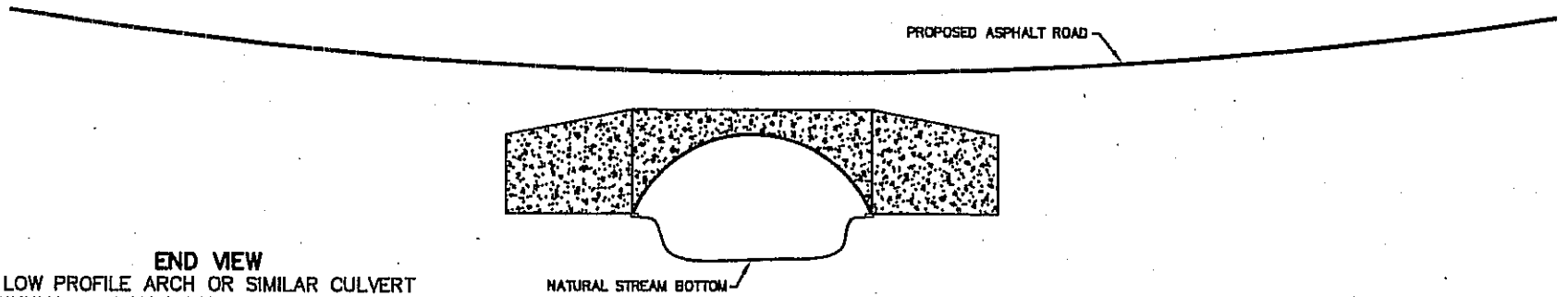

END VIEW
LOW PROFILE ARCH OR SIMILAR CULVERT
PERINNIAL STREAM MAINTAINS NATURAL BOTTOM

NOT TO SCALE

ROWE SURVEYING AND ENGINEERING COMPANY, INC.
CONSULTING ENGINEERS
CA–00033–LS
3755 COTTAGE HILL ROAD MOBILE, ALABAMA 36609
PHONE 251–666–2766 FAX 251–660–1040

ACAD2005: 32422.dwg	*JOB: 32422*
TDS:	*FB:*
SCALE: NOT TO SCALE	*TAX: 06–33–08*
	DATE: 08 AUGUST 2008

© COPYRIGHT 2008
ALL RIGHTS RESERVED
ROWE SURVEYING & ENGINEERING CO., INC.

WETLAND DELINEATION MAP

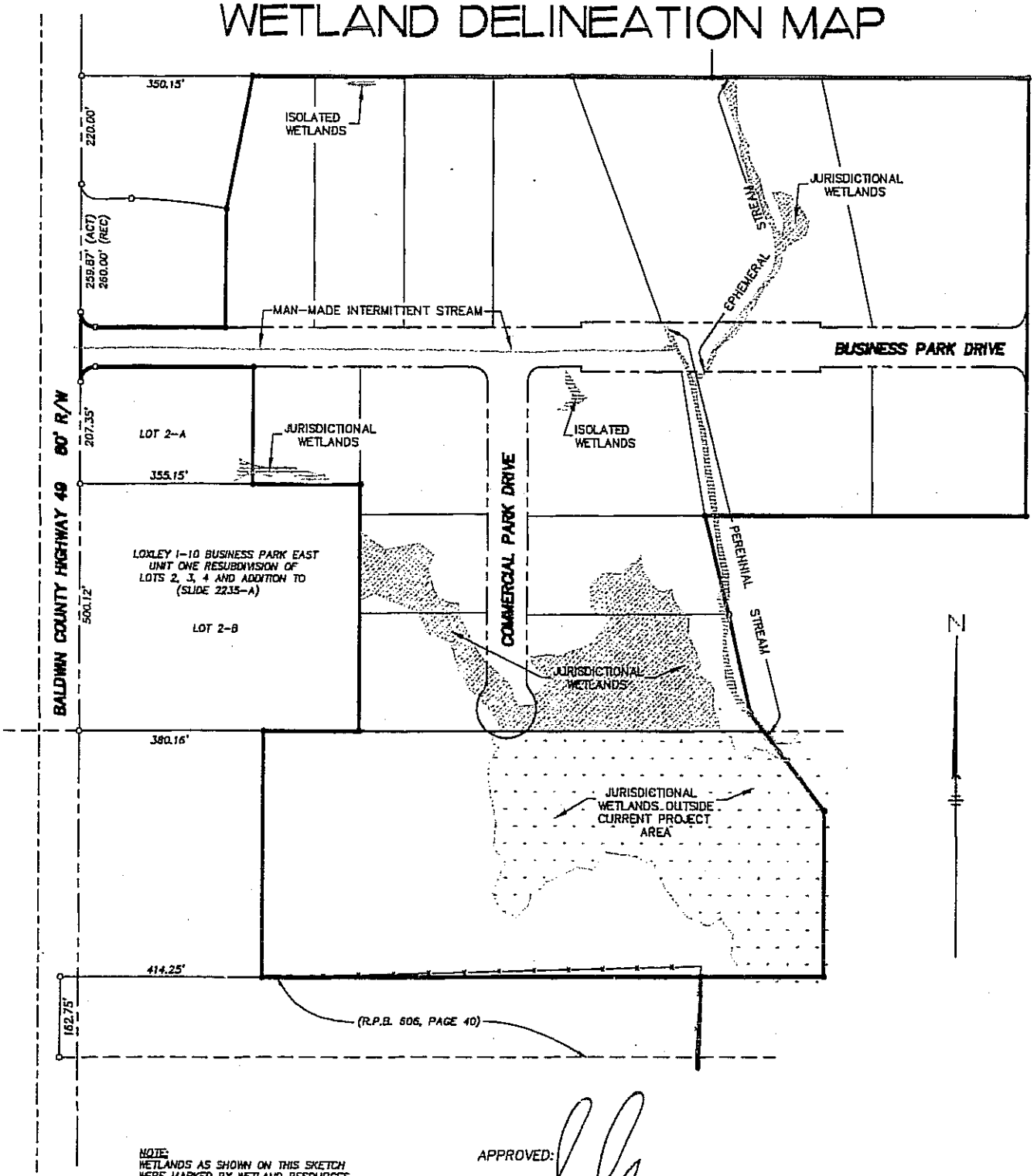

NOTE:
WETLANDS AS SHOWN ON THIS SKETCH WERE MARKED BY WETLAND RESOURCES ENVIRONMENTAL CONSULTING

APPROVED: _____ Date: 08/14/08

Donald W. Rowe, PLS
Alabama Licensed Professional Land Surveyor
Registration No. 9359-S

300 0 300 600

SCALE: 1" = 300'

ROWE SURVEYING AND ENGINEERING COMPANY, INC.
CONSULTING ENGINEERS
CA-00033-LS
3755 COTTAGE HILL ROAD MOBILE, ALABAMA 36609
PHONE 251-666-2766 FAX 251-660-1040

ACAD2006: 32422.dwg TDS: SCALE: 1" = 300.0'	JOB: 32422 FB: TAX: 05-33-08 DATE: 06 AUGUST 2008

© COPYRIGHT 2008
ALL RIGHTS RESERVED
ROWE SURVEYING & ENGINEERING CO., INC.

WETLAND DELINEATION MAP
(with WRAP & Data Point Locations)

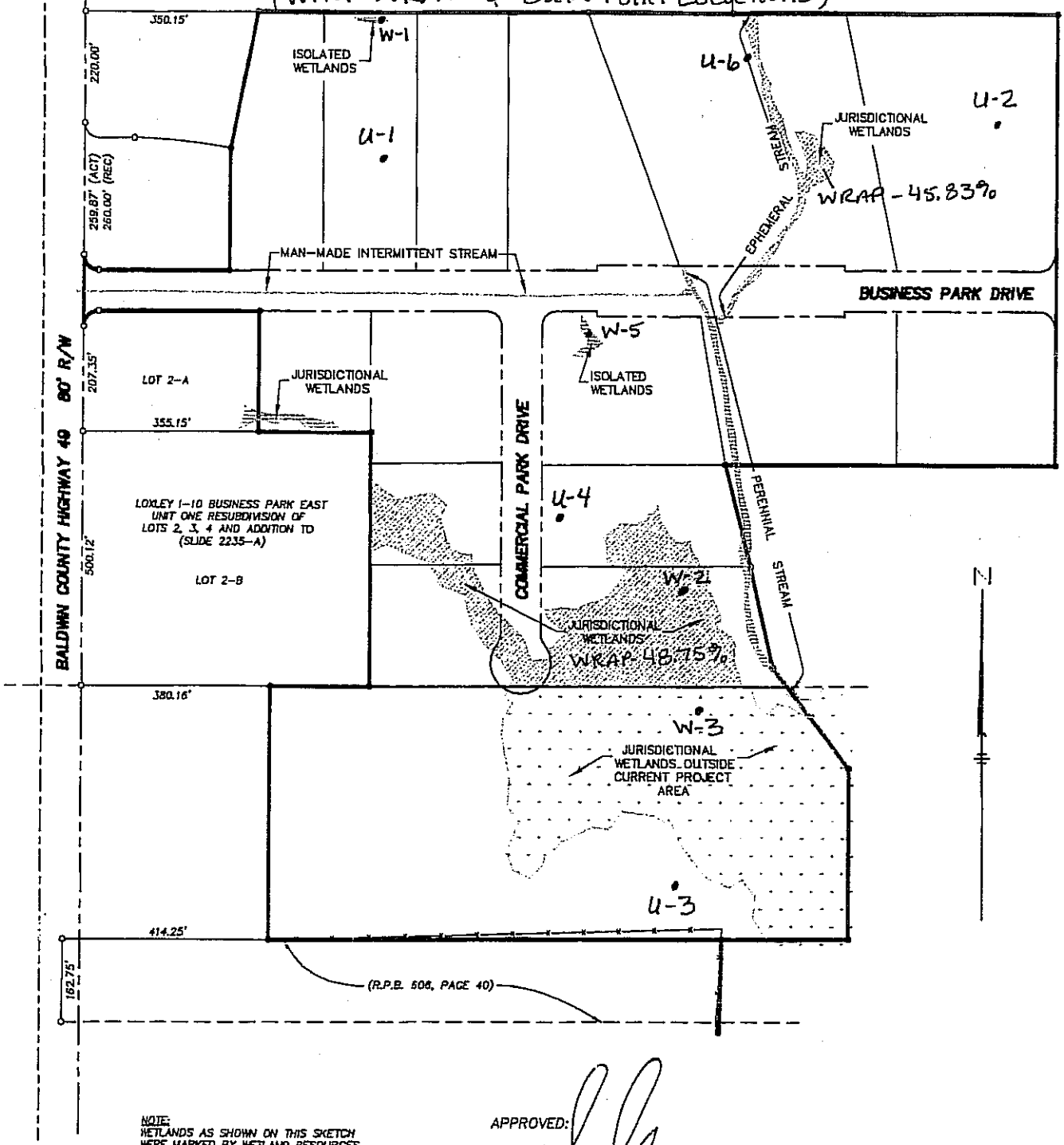

NOTE:
WETLANDS AS SHOWN ON THIS SKETCH WERE MARKED BY WETLAND RESOURCES ENVIRONMENTAL CONSULTING

APPROVED: _____ Date: 08/14/08

Donald W. Rowe, PLS
Alabama Licensed Professional Land Surveyor
Registration No. 9359-S

300 0 300 600

SCALE: 1" = 300'

ROWE SURVEYING AND ENGINEERING COMPANY, INC.
CONSULTING ENGINEERS
CA-00033-LS
3755 COTTAGE HILL ROAD MOBILE, ALABAMA 36609
PHONE 251-666-2766 FAX 251-660-1040

ACAD2005: 32422.dwg TDS: SCALE: 1" = 300.0'	JOB: 32422 FB: TAX: 05-33-08 DATE: 08 AUGUST 2008

© COPYRIGHT 2008
ALL RIGHTS RESERVED
ROWE SURVEYING & ENGINEERING CO., INC.

SITE PLAN

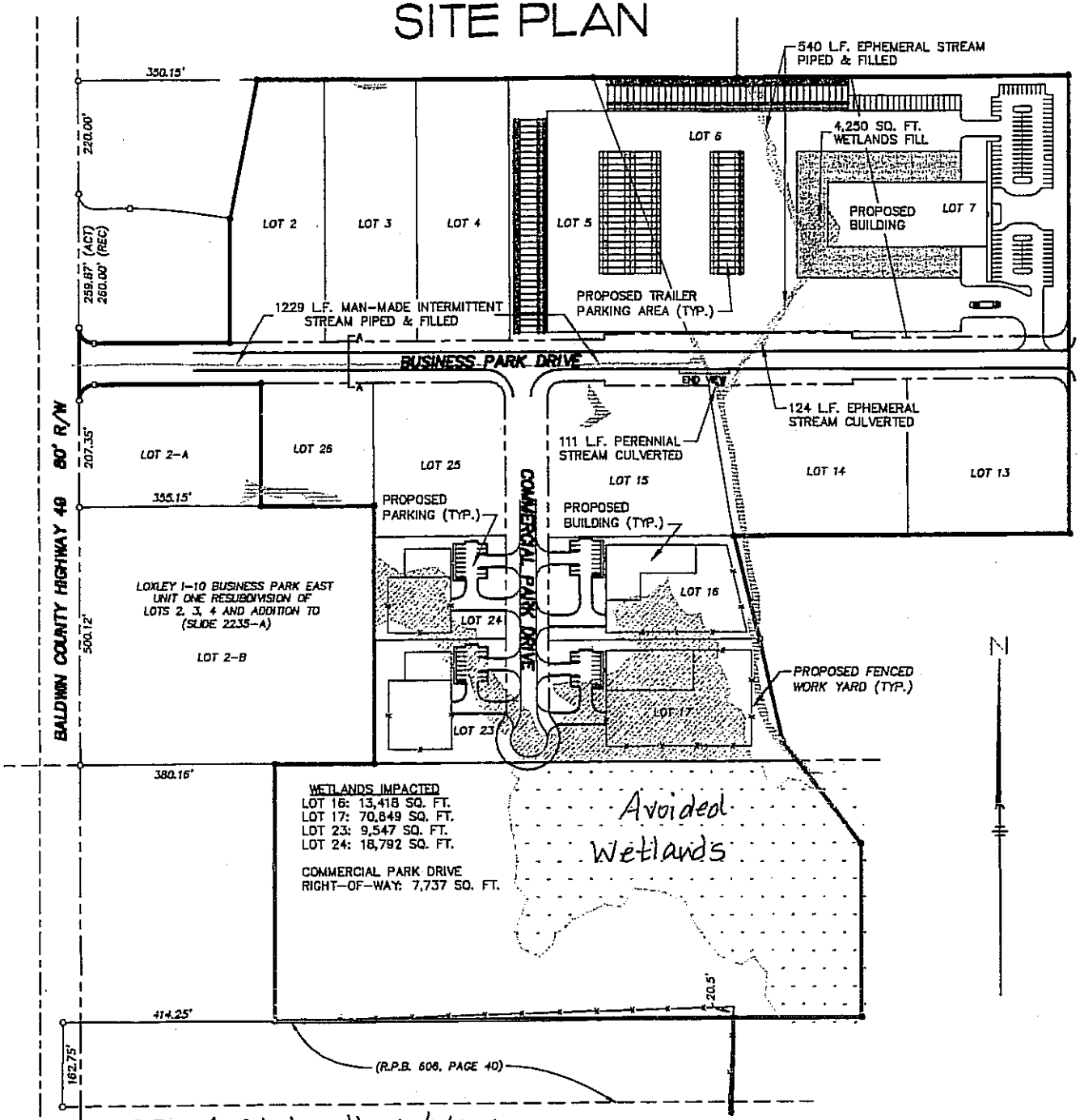

- Avoided wetlands/WOUS
- Filled wetlands/WOUS

TOTAL SQUARE FEET OF PROPOSED FILL OF WETLANDS: 124,393 SQ. FT.

TOTAL CUBIC YARDS OF PROPOSED FILL OF WETLANDS: 4607.1 CU. YDS.

LINEAR FEET OF STREAM CHANNELS TO BE PIPED
EPHEMERAL: 664 L.F.
INTERMITTENT: 1229 L.F.
PERENNIAL: 111 L.F.

THIS IS A PROPOSED LAY-OUT

APPROVED:

Date: 08/14/08

Donald W. Rowe, PLS
Alabama Licensed Professional Land Surveyor
Registration No. 9359-S

300 0 300 600

SCALE: 1" = 300'

REVISED 22 OCT. 2008
REVISE NOTATIONS

REVISED 27 AUG. 2008
ADD SECTION & END VIEW NOTATIONS

© COPYRIGHT 2008
ALL RIGHTS RESERVED
ROWE SURVEYING & ENGINEERING CO., INC.

ROWE SURVEYING AND ENGINEERING COMPANY, INC.
CONSULTING ENGINEERS
CA-00033-LS
3765 COTTAGE HILL ROAD MOBILE, ALABAMA 36609
PHONE 251-666-2766 FAX 251-660-1040

ACAD2005: 32422.dwg TDS: SCALE: 1" = 300.0'	JOB: 32422 FB: TAX: 05-33-08 DATE: 08 AUGUST 2008

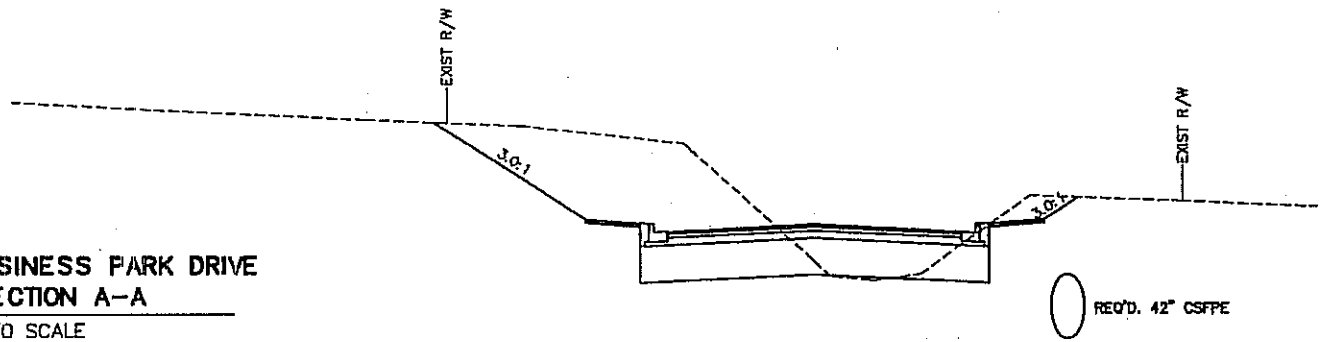

SECTION OF BUSINESS PARK DRIVE
SEE SECTION A–A

NOT TO SCALE

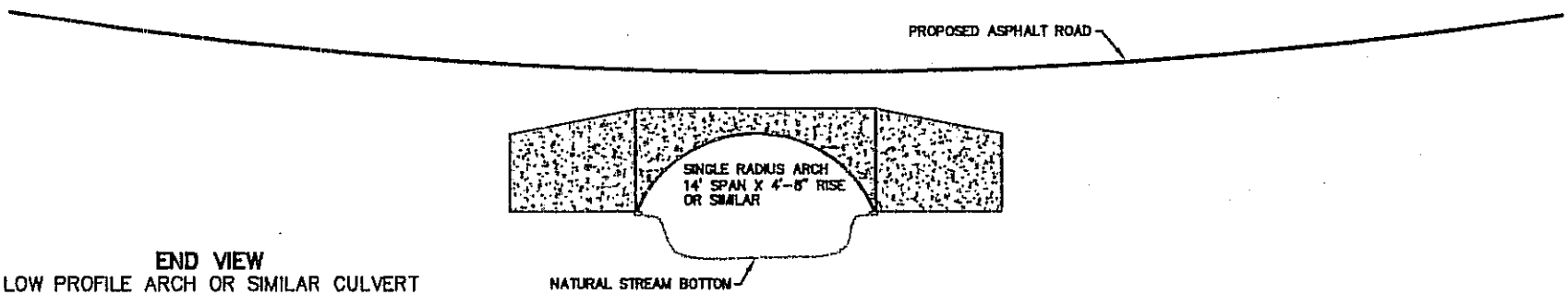

END VIEW
LOW PROFILE ARCH OR SIMILAR CULVERT
PERINNIAL STREAM MAINTAINS NATURAL BOTTOM

NOT TO SCALE

ROWE SURVEYING AND ENGINEERING COMPANY, INC.
CONSULTING ENGINEERS
CA-00033-LS
3755 COTTAGE HILL ROAD MOBILE, ALABAMA 36609
PHONE 251-666-2766 FAX 251-660-1040

ACAD2005: 32422.dwg	*JOB: 32422*
TDS:	*FB:*
SCALE: NOT TO SCALE	*TAX: 05-33-08*
	DATE: 06 AUGUST 2008

© COPYRIGHT 2008
ALL RIGHTS RESERVED
ROWE SURVEYING & ENGINEERING CO., INC.

REVISED 22 OCT. 2008
ADD ARCH NOTATIONS

WETLAND DELINEATION MAP

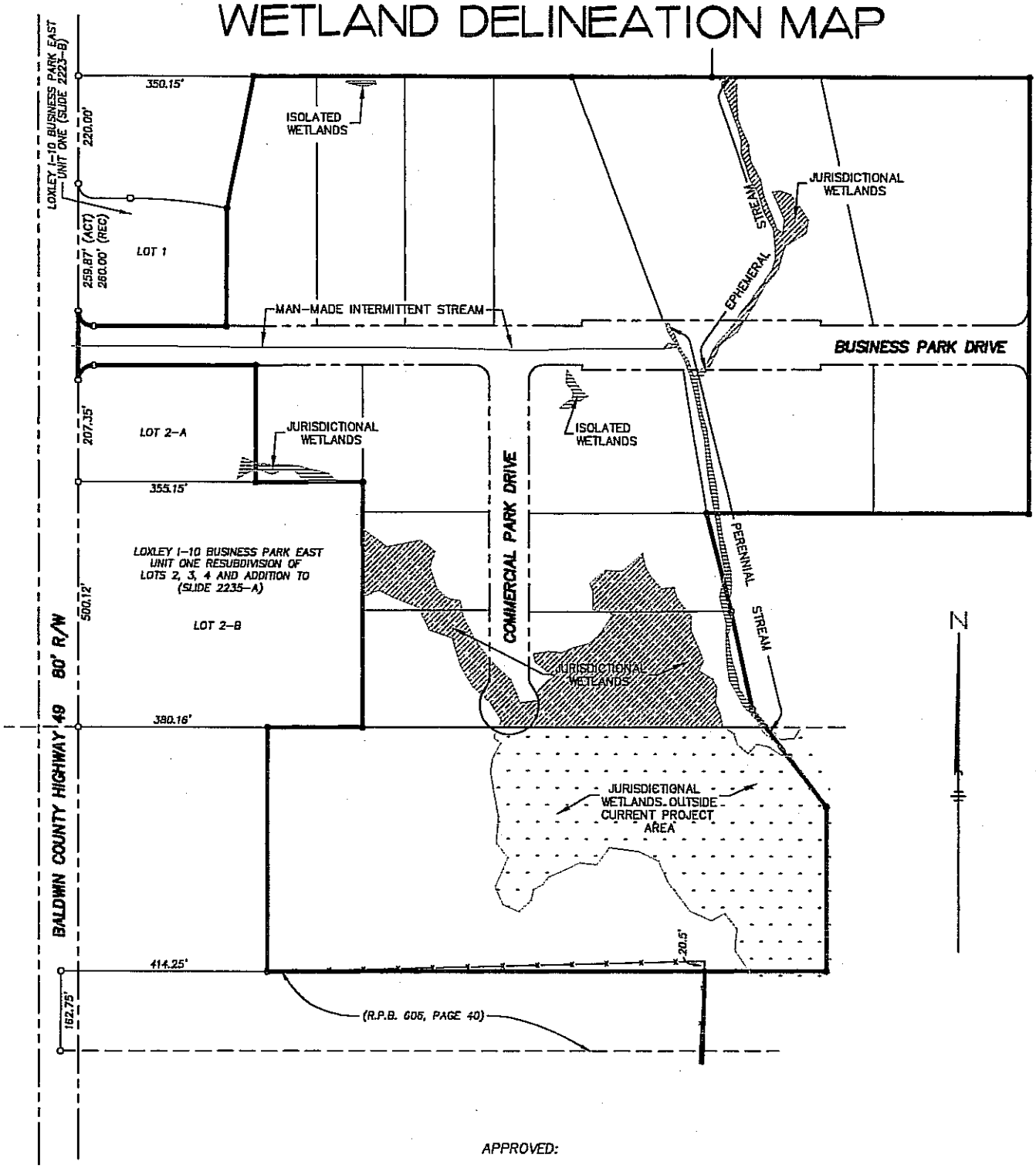

APPROVED:

_____ Date: _____

Donald W. Rowe, PLS
Alabama Licensed Professional Land Surveyor
Registration No. 9359-S

ROWE SURVEYING AND ENGINEERING COMPANY, INC.
CONSULTING ENGINEERS
CA-00033-LS
3755 COTTAGE HILL ROAD MOBILE, ALABAMA 36609
PHONE 251-666-2766 FAX 251-660-1040

ACAD2005: 32422.dwg TDS: SCALE: 1" = 300.0'	JOB: 32422 FB: TAX: 05-33-08 DATE: 06 AUGUST 2008

© COPYRIGHT 2008
ALL RIGHTS RESERVED
ROWE SURVEYING & ENGINEERING CO., INC.

SITE PLAN

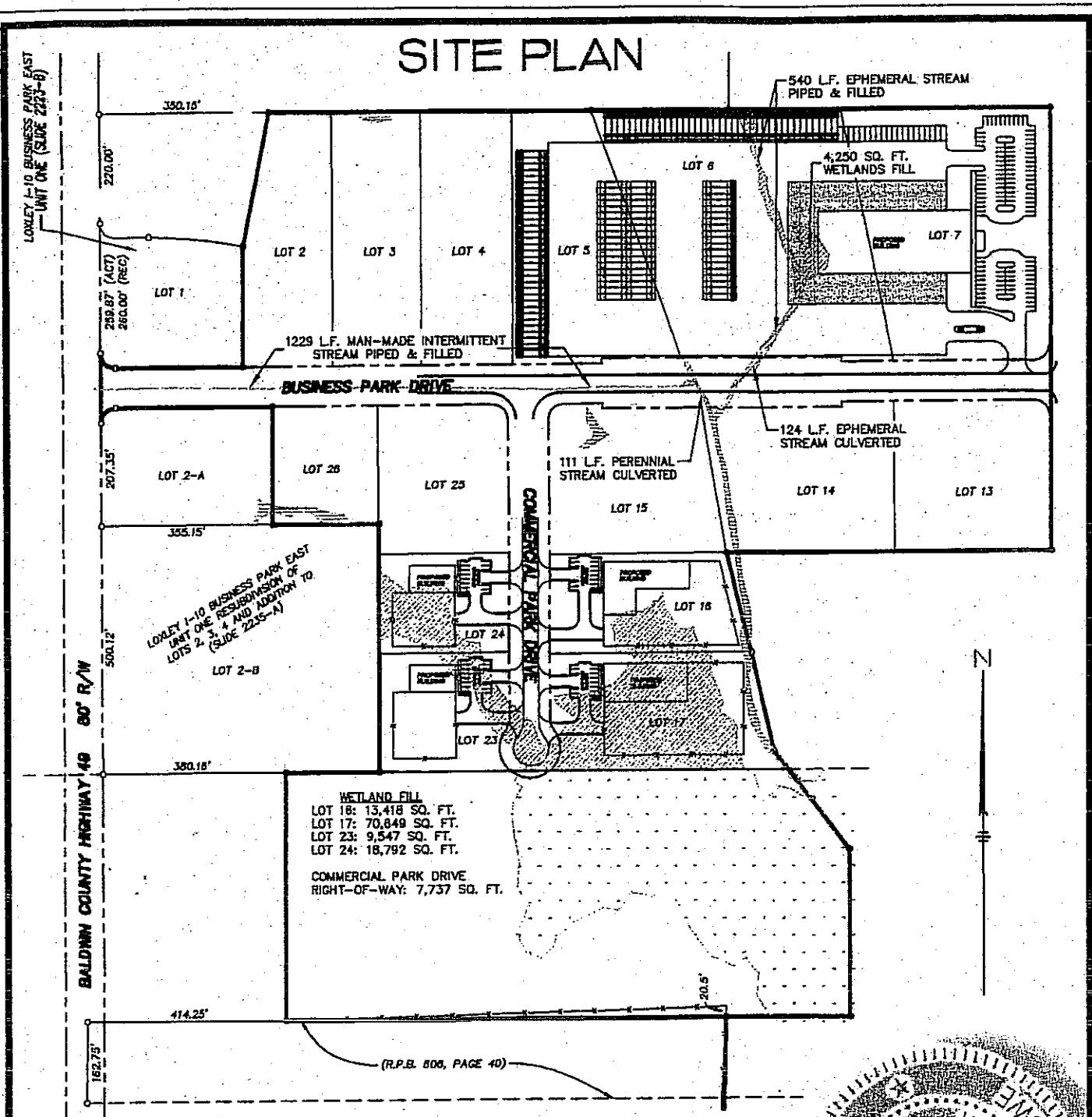

TOTAL SQUARE FEET OF PROPOSED FILL OF WETLANDS: 124,393 SQ. FT.

TOTAL CUBIC YARDS OF PROPOSED FILL OF WETLANDS: 4607.1 CU. YDS.

LINEAR FEET OF STREAM CHANNELS TO BE PIPED
EPHEMERAL: 664 L.F.
INTERMITTENT: 1229 L.F.
PERENNIAL: 111 L.F.

THIS IS A PROPOSED LAY-OUT

APPROVED:

Donald W. Rowe, PLS
Alabama Licensed Professional Land Surveyor
Registration No. 9359-S

Date: 8/14/08

ALABAMA LICENSED PROFESSIONAL LAND SURVEYOR 9359-S DONALD W. ROWE

ROWE SURVEYING AND ENGINEERING COMPANY, INC.
CONSULTING ENGINEERS
CA-00033-LS
3755 COTTAGE HILL ROAD MOBILE, ALABAMA 36609
PHONE 251-666-2766 FAX 251-660-1040

ACADR006: 32422.dwg	*JOB: 32422*
TDS:	*FB:*
SCALE: 1" = 300.0'	*TAX: 05-33-08*
	DATE: 06 AUGUST 2008

© COPYRIGHT 2008
ALL RIGHTS RESERVED
ROWE SURVEYING & ENGINEERING CO., INC.

TYPICAL CROSS-SECTION

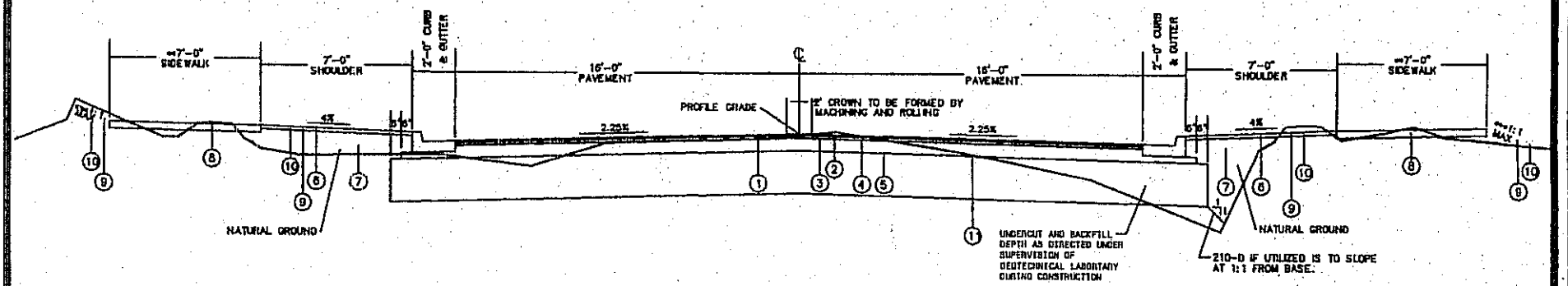

TYPICAL ROADWAY SECTION

NOT TO SCALE

1. 429-A IMPROVED BITUMINOUS CONCRETE WEARING SURFACE LAYER, 0.75" MAXIMUM AGGREGATE SIZE MIX, ESAL RANGE B, 1.5" MIN. COMPACTED THICKNESS, (185 LB/SY)
2. 429-C IMPROVED BITUMINOUS CONCRETE BASE LAYER, 1.25" MAXIMUM AGGREGATE SIZE MIX, ESAL RANGE B, 2.5" MIN. COMPACTED THICKNESS, (275 LB/SY)
3. 401-A BITUMINOUS TREATMENT, TYPE "L"
4. 301-A CRUSHED AGGREGATE BASE COURSE, SECTION 825, ROAD MIXED, 5" COMPACTED THICKNESS
5. 230-A ROADBED PROCESSING
6. 650-A TOPSOIL, 2" COMPACTED THICKNESS, COMPACTED IN PLACE
7. 210-D SUITABLE MATERIAL FROM UNCLASSIFIED EXCAVATION OR BORROW EXCAVATION (TRUCKBED MEASURE)
8. 210-A UNCLASSIFIED EXCAVATION (C.Y.)
9. 652-A SEEDING, MIX 3E
10. 656-A MULCHING, CLASS A, TYPE 1
11. 210-D BORROW EXCAVATION, SELECT BACKFILL (SOIL CLASSIFICATION A-2-4 OR BETTER) (C.Y.T.B.M.)

*** SEE CROSS SECTIONS, TIE IN SLOPES VARY

ROWE SURVEYING AND ENGINEERING COMPANY, INC.
CONSULTING ENGINEERS
CA-00033-LS
3755 COTTAGE HILL ROAD · MOBILE, ALABAMA 36609
PHONE 251-666-2766 FAX 251-660-1040

ACAD2005: 32422.dwg	JOB: 32422
TDS:	FB:
SCALE: NOT TO SCALE	TAX: 05-33-08
	DATE: 08 AUGUST 2008

© COPYRIGHT 2008
ALL RIGHTS RESERVED
ROWE SURVEYING & ENGINEERING CO., INC.

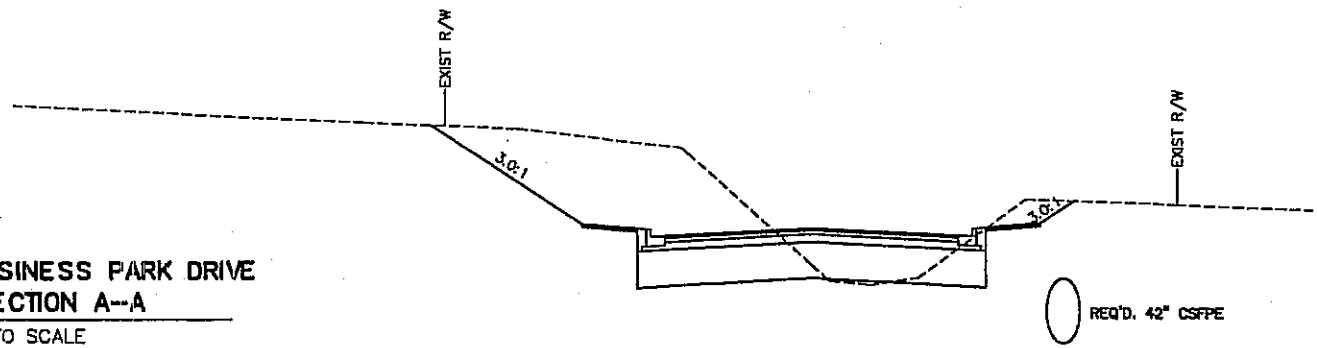

SECTION OF BUSINESS PARK DRIVE
SEE SECTION A--A

NOT TO SCALE

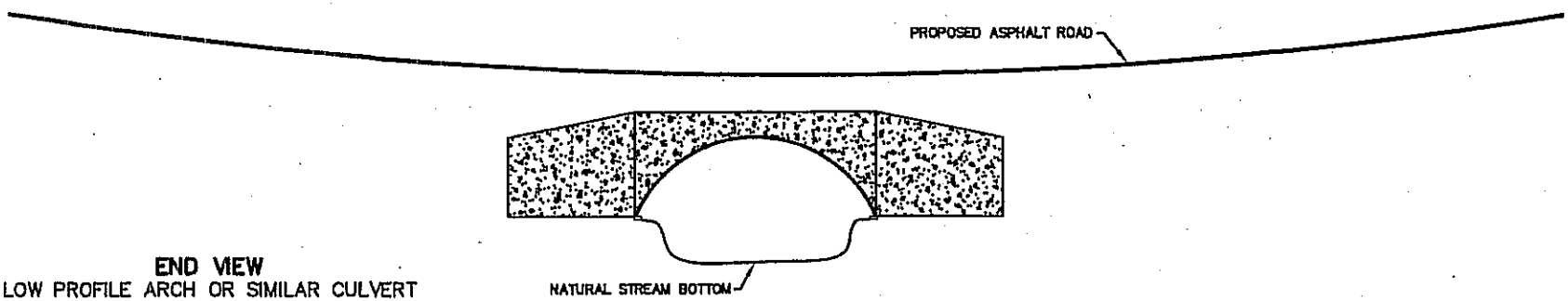

END VIEW
LOW PROFILE ARCH OR SIMILAR CULVERT
PERINNIAL STREAM MAINTAINS NATURAL BOTTOM

NOT TO SCALE

ROWE SURVEYING AND ENGINEERING COMPANY, INC.
CONSULTING ENGINEERS
CA-00033-LS
3755 COTTAGE HILL ROAD MOBILE, ALABAMA 36609
PHONE 251-666-2766 FAX 251-660-1040

ACAD2005: 32422.dwg	*JOB: 32422*
TDS:	*FB:*
SCALE: NOT TO SCALE	*TAX: 06-33-08*
	DATE: 08 AUGUST 2008

© COPYRIGHT 2008
ALL RIGHTS RESERVED
ROWE SURVEYING & ENGINEERING CO., INC.