DEPARTMENT OF THE ARMY
U.S. ARMY ENGINEER DISTRICT, MOBILE DISTRICT
P.O. BOX 2288
MOBILE, ALABAMA 36628-0001

REPLY TO
ATTENTION OF:

CESAM-RD-M
PUBLIC NOTICE NO. SAM-2009-01576-SMZ **July 21, 2014**

JOINT PUBLIC NOTICE
U.S. ARMY CORPS OF ENGINEERS
AND
MISSISSIPPI DEPARTMENT OF ENVIRONMENTAL QUALITY
OFFICE OF POLLUTION CONTROL

PROPOSED FILLING OF WATERS OF THE U.S. IN CONJUNCTION WITH A MULTI-USE RETAIL COMMERCIAL DEVELOPMENT PETAL, FORREST COUNTY, MISSISSIPPI

TO WHOM IT MAY CONCERN:

This District has received an application for a Department of the Army permit pursuant to Section 404 of the Clean Water Act (33 USC 1344). Please communicate this information to interested parties.

APPLICANT: A & R Land Management, LLC
1178 Old River Road
Petal, Mississippi 39465

AGENT: Pittman Environmental Services, LLC
Attention: Mr. Bart Pittman
Post Office Box 1926
Purvis, Mississippi 39475

LOCATION OF WORK: Adjacent to Evelyn Gandy Parkway, Section 31, Township 5 North, Range 12 West, Petal, Forrest County, Mississippi, Latitude 31.350716° N, Longitude -89.238825° W

WATERWAY: Unnamed tributary to Dry Prong Creek

PROPOSED WORK: The proposed project includes the commercial development of an 8.2 acre parcel. Approximately 4.8 acres of this parcel was previously permitted in 2012 (SAM-2009-1576-SMZ). The 2012 permit authorized the impacts of 0.35 acres of low quality wetland and 458 LF of intermittent stream. The applicant has filled the wetland and piped the stream as authorized in the 2012 permit.

Since the issuance of the original permit and during the initial construction phase of the development, additional properties became available for purchase. The applicant has completed four transactions for acquisition of adjacent parcels. The acquisition of these parcels combined with the originally permitted 4.8 acre parcel total approximately 8.2 acres.

The current site plan will fully utilize the 8.2 acre parcel, requiring additional impacts to 0.21 acres of low quality wetland and 375 LF of intermittent stream. **The total impacts for the proposed site plan (previously permitted plus proposed) are 0.56 acres of low quality wetland and 833 LF of intermittent stream.**

AVOIDANCE & MINIMIZATION: The agent has stated the following concerning avoidance and minimization to Waters of the United States: Due to "Due to the location of wetland/stream within the site and the modification requirement of 300' parcel depth, wetland/stream impacts within the site cannot be minimized." and "After permit issuance a 0.63 acre parcel was deeded to the City of Petal for the frontage road running parallel with and adjacent to the south right of way line of Evelyn Gandy Parkway. The deeding of the frontage road to the City created a decreased parcel depth of 240' on the west end and 121'of depth on the east end of the property.

After researching several existing developments and communicating with prospective tenants it was apparent that a minimum depth of 300' would be needed for sufficient development. The ability to acquire more properties has allowed for the modification of the site plan in effort to address the minimum depth threshold. The modified site plan will allow for the incorporation of green space, increased parking, and improved ingress/egress access. The increased size of the parcel will allow for 300' average depth and 1,165' frontage along Evelyn Gandy Parkway. The modified site plan will also allow for more commercial/retail space. "The Corps has not verified the adequacy of the applicant's avoidance and minimization at this time.

MITIGATION: The applicant has stated the following concerning mitigation for unavoidable impacts to Waters of the United States: "Wetland Mitigation: The applicant proposes the purchase of BLH (bottomland hardwood) credits from a COE approved mitigation bank within the 6-digit HUC of (the) impact site" and "Stream Mitigation: The applicant proposes to compensate for stream impacts by establishing a permittee responsible mitigation area"

Preliminary details for stream mitigation proposes enhancement of the riparian buffer adjacent to both sides of Greens Creek. This segment of Greens Creek is sited on a 27±acre applicant owned parcel located 1.5 miles north of the permit area. The applicant proposes to enhance riparian buffer by removal of invasive species and

establishment of a native vegetative community. The proposed mitigation actions will a continuation of the same mitigation actions already being implemented in the original stream mitigation site.
The Corps has not verified the adequacy of this mitigation proposal at this time.

WATER QUALITY: The applicant has applied for certification from the State of Mississippi in accordance with Section 401(a)(1) of the Clean Water Act, and upon completion of the required advertising, a determination relative to certification will be made by the Mississippi Department of Environmental Quality.

HISTORIC PROPERTIES: The National Register of Historic Places has been consulted and no properties listed in or eligible for the National Register are known to exist which would be affected by the proposed work. This review constitutes the full extent of cultural resources investigations unless comment to this notice is received documenting that significant sites or properties exist which may be affected by this work, or that adequately documents that a potential exists for the location of significant sites or properties within the permit area. Copies of this notice are being sent to the State Historic Preservation Officer and the U.S. Department of the Interior, National Park Service, Division of Archeological Services.

On December 20, 2013, the Mississippi Department of Archives and History concurred that the current project parcel contains no historic properties or resources eligible for listing in the National Register of Historic Places or are likely to be affected by the proposed project (MDAH #0-059-13)

ENDANGERED SPECIES: Preliminary review of this application and the U.S. Department of the Interior List of Endangered and Threatened Wildlife and Plants indicate that the proposed activity will have no effect on any listed endangered or threatened species. This determination is being coordinated with the U.S. Fish and Wildlife Service (USFWS) via this Public Notice.

The USFWS concurred on October 21, 2013 that the project would have "no effect" on federally listed species. The evaluation at that time encompassed the entire current parcel and should require no further coordination with the USFWS.

COMMENTS: This public notice is being distributed to all known interested persons and serves to solicit comments from the public, Federal, State, and local agencies and officials, Indian Tribes, and other interested parties, in order to assist in developing facts on which a decision by the U.S. Army Corps of Engineers (Corps) can be based.

Any comments received will be considered by the Corps to determine whether to issue, modify, condition or deny a permit for this proposal. To make this decision, comments are used to assess impacts on endangered species, historic properties, water quality, general environmental effects, and the other public interest factors listed above. Comments are used in the preparation of an Environmental Assessment and/or an Environmental Impact Statement pursuant to the National Environmental Policy Act. Comments are also used to determine the need for a public hearing and to determine the overall public interest of the proposed activity.

Any person may request, in writing, within the comment period specified in this notice, that a public hearing be held to consider this application. Requests for public hearings shall state with particularity, the reasons for holding a public hearing.

For accuracy and completeness of the record, all data in support of or in opposition to the proposed work should be submitted in writing setting forth sufficient detail to furnish a clear understanding of the reasons for support or opposition. The decision whether to issue a permit will be based on an evaluation of the probable impact, including cumulative impacts, of the proposed activity on the public interest. That decision will reflect the national concern for both protection and utilization of important resources.

The benefit which reasonably may be expected to accrue from the proposal must be balanced against its reasonably foreseeable detriments. All factors which may be relevant to the proposal will be considered, including the cumulative effects thereof; among those are conservation, economics, aesthetics, general environmental concerns, wetlands, cultural values, fish and wildlife values, flood hazards, flood plain values, land use, navigation, shoreline erosion and accretion, recreation, water supply and conservation, water quality, energy needs, safety, food production, and in general, the needs and welfare of the people.

Correspondence concerning this notice should refer to Public Notice Number SAM-2009-01576-SMZ and should be directed to: U.S. Army Corps of Engineers Mobile District, Regulatory Division (RD-I-S), Attention: Rudolph C. Villarreal, Post Office Box 2288, Mobile, Alabama 36628-0001, with a copy furnished to the Mississippi Department of Environmental Quality, Office of Pollution Control, Environmental Permitting Division, Post Office Box 2261, Jackson, Mississippi 39225.

All Comments should be received no later than 30 days from the date of this Public Notice. If you have any questions concerning this publication, you may contact the project manager at (251) 690-3246, or by e-mail at rudolph.c.villarreal@usace.army.mil . Please refer to the above Public Notice number SAM-2009-01576-SMZ.

For additional information about our Regulatory Program, please visit our web site at www.sam.usace.army.mil/Missions/Regulatory.aspx , and please take a moment to complete our customer satisfaction survey while you're there. Your responses are appreciated and will allow us to improve our services.

MOBILE DISTRICT
U.S. Army Corps of Engineers

Enclosures

PROPOSED STREAM MITIGATION SITE
LOCATION/PROXIMITY MAP
SAM-2009-1576-SMZ

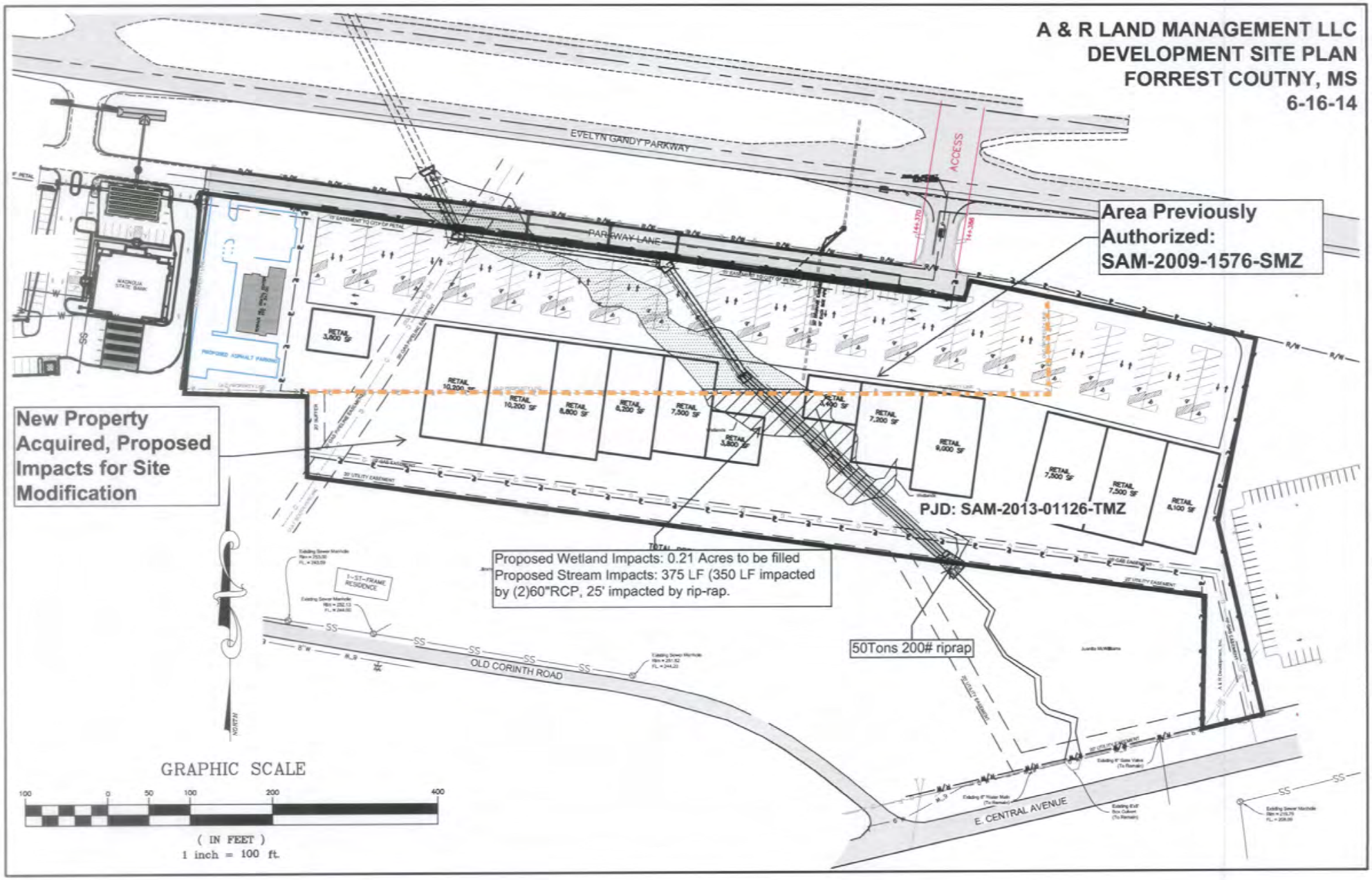
A & R LAND MANAGEMENT LLC
DEVELOPMENT SITE PLAN
FORREST COUTNY, MS
6-16-14
EVELYN GANDY PARKWAY
ACCESS
PARKWAY LANE
Area Previously Authorized: SAM-2009-1576-SMZ
New Property Acquired, Proposed Impacts for Site Modification
PJD: SAM-2013-01126-TMZ
Proposed Wetland Impacts: 0.21 Acres to be filled
Proposed Stream Impacts: 375 LF (350 LF impacted by (2)60"RCP, 25' impacted by rip-rap.
50Tons 200# riprap
OLD CORINTH ROAD
E. CENTRAL AVENUE
NORTH
GRAPHIC SCALE
(IN FEET)
1 inch = 100 ft.

SITE PLAN/ . . . 2012

A & R Land Management

SAM–2009–1576–SMZ

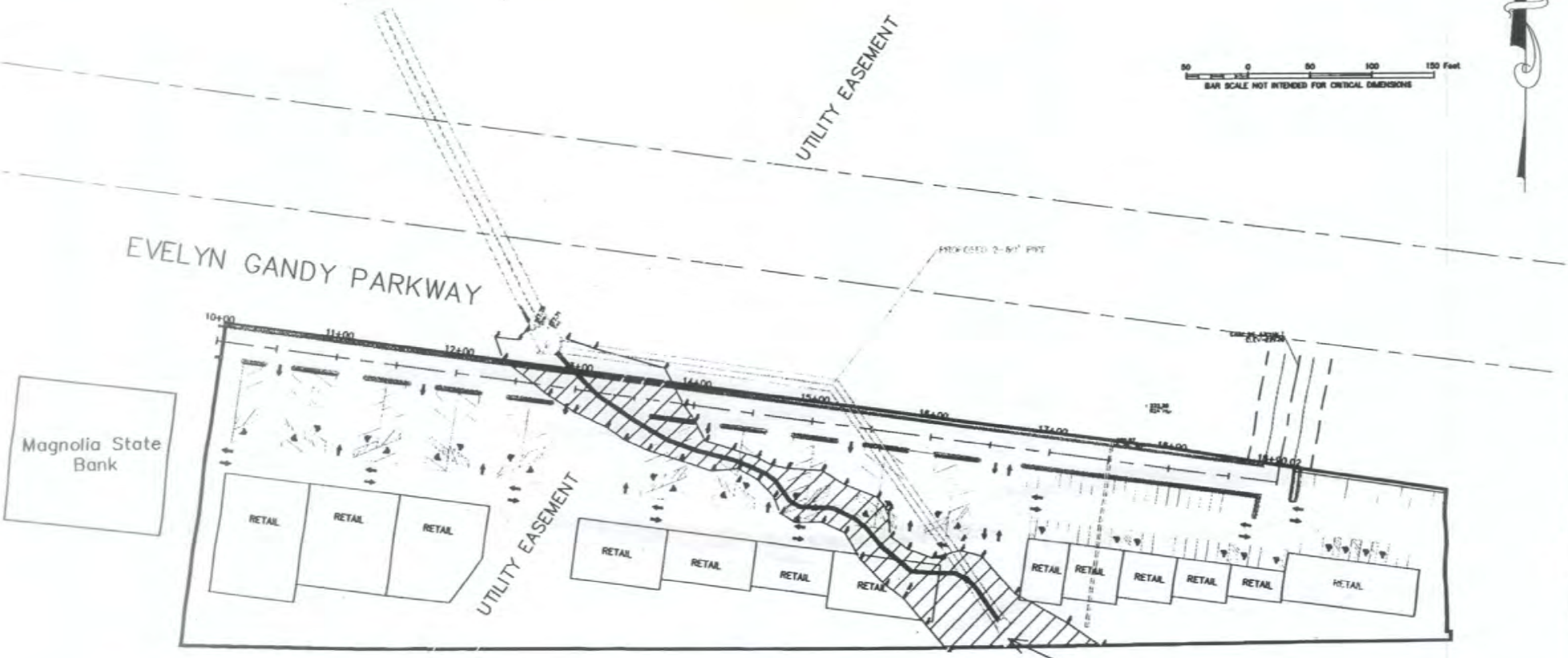

Stream to be realigned by pipe = 458± L.F., 0.11 Ac.
2–60" Pipe With Proposed Riprap/Outfall Structure

Wetland area to be filled = 0.35 Acres
Earthen fill to be placed within wetland = 6,335± C.Y.

OUTFALL FROM PIPE WITHIN SITE

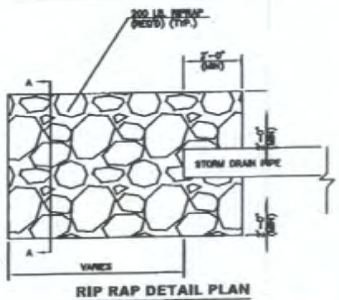

RIP RAP DETAIL PLAN

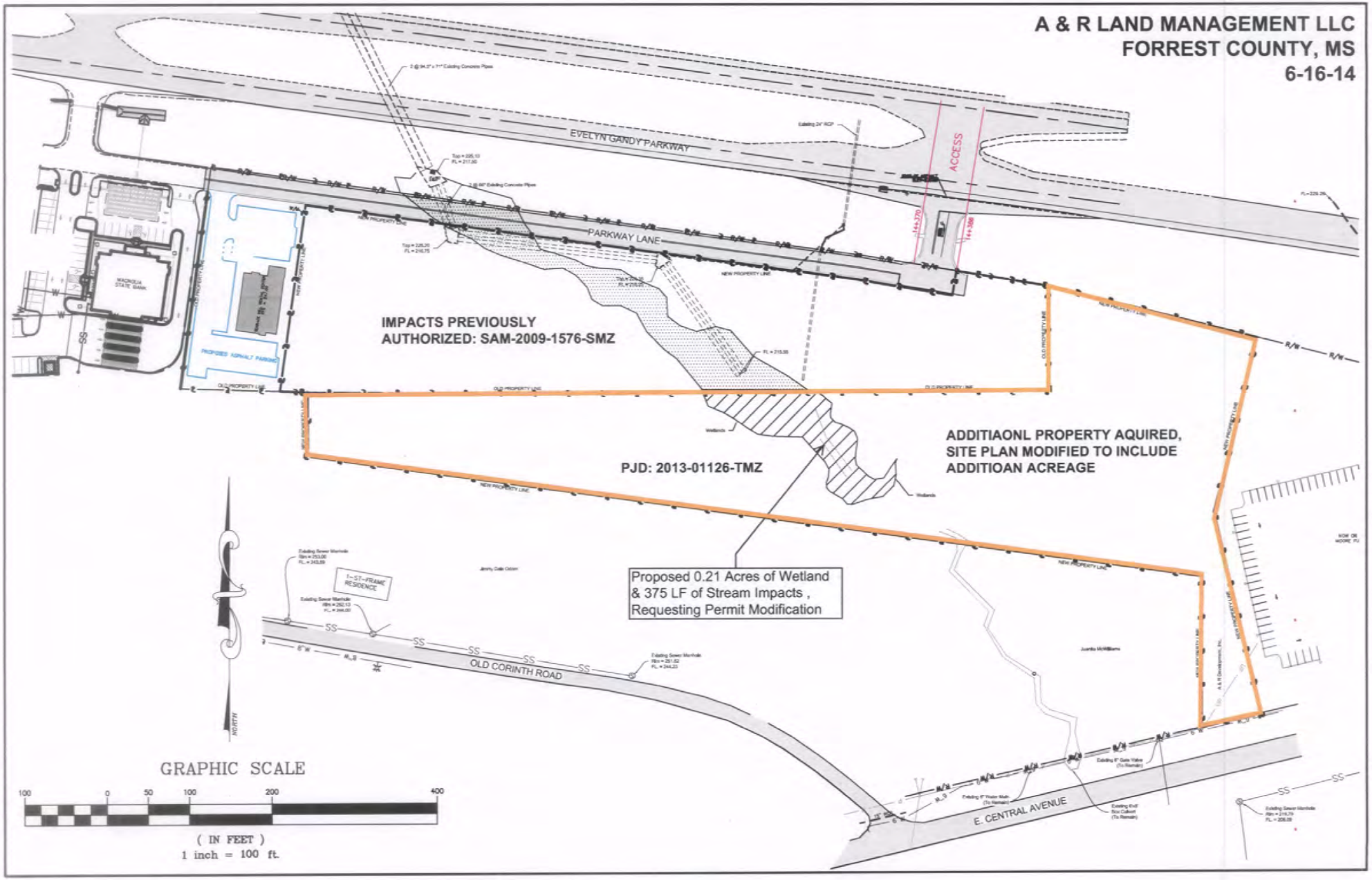
A & R LAND MANAGEMENT LLC
FORREST COUNTY, MS
6-16-14
EVELYN GANDY PARKWAY
PARKWAY LANE
ACCESS
IMPACTS PREVIOUSLY
AUTHORIZED: SAM-2009-1576-SMZ
PJD: 2013-01126-TMZ
ADDITIAONL PROPERTY AQUIRED,
SITE PLAN MODIFIED TO INCLUDE
ADDITIOAN ACREAGE
Proposed 0.21 Acres of Wetland
& 375 LF of Stream Impacts ,
Requesting Permit Modification
OLD CORINTH ROAD
E. CENTRAL AVENUE
NORTH
GRAPHIC SCALE
100 0 50 100 200 400
(IN FEET)
1 inch = 100 ft.

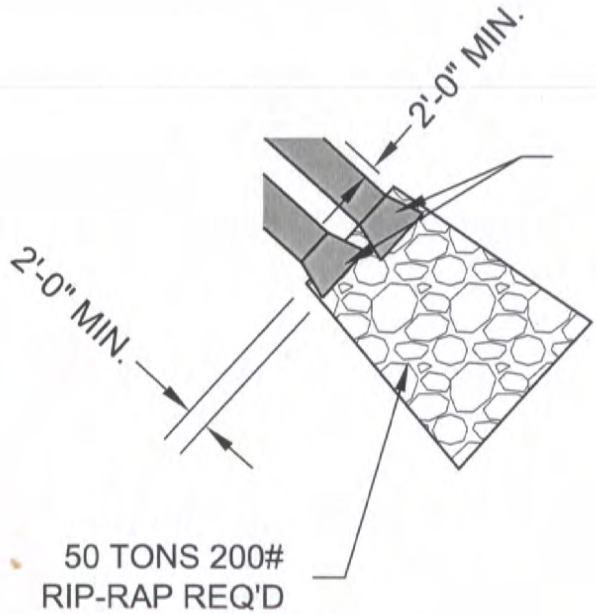

RIP-RAP DETAIL PLAN
N.T.S.

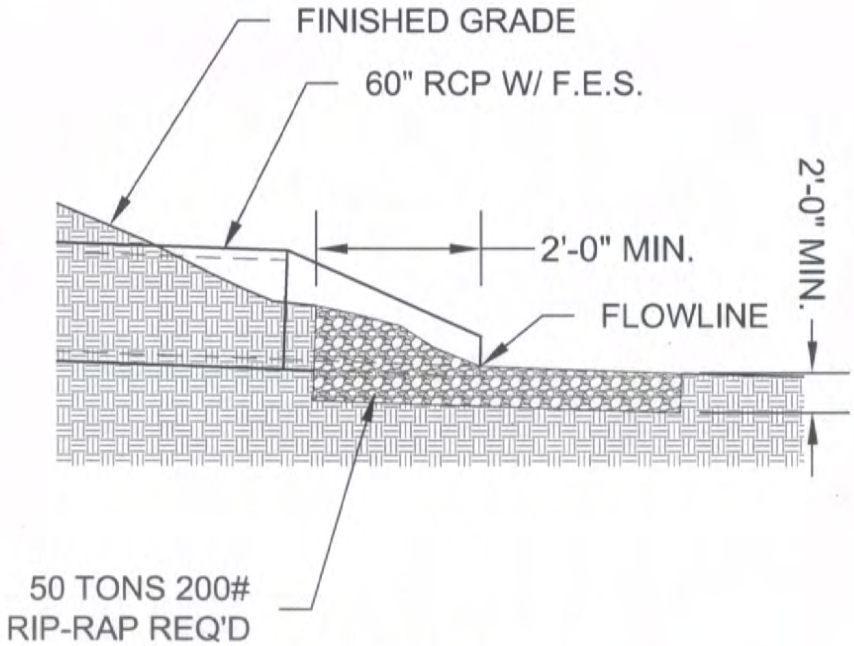

RIP-RAP DETAIL SECTION
N.T.S.

PRELIMINARY WETLAND DELINEATION

Approximately 41.7 Acres
Section 30, T-5N, R-12W, Forrest County, MS

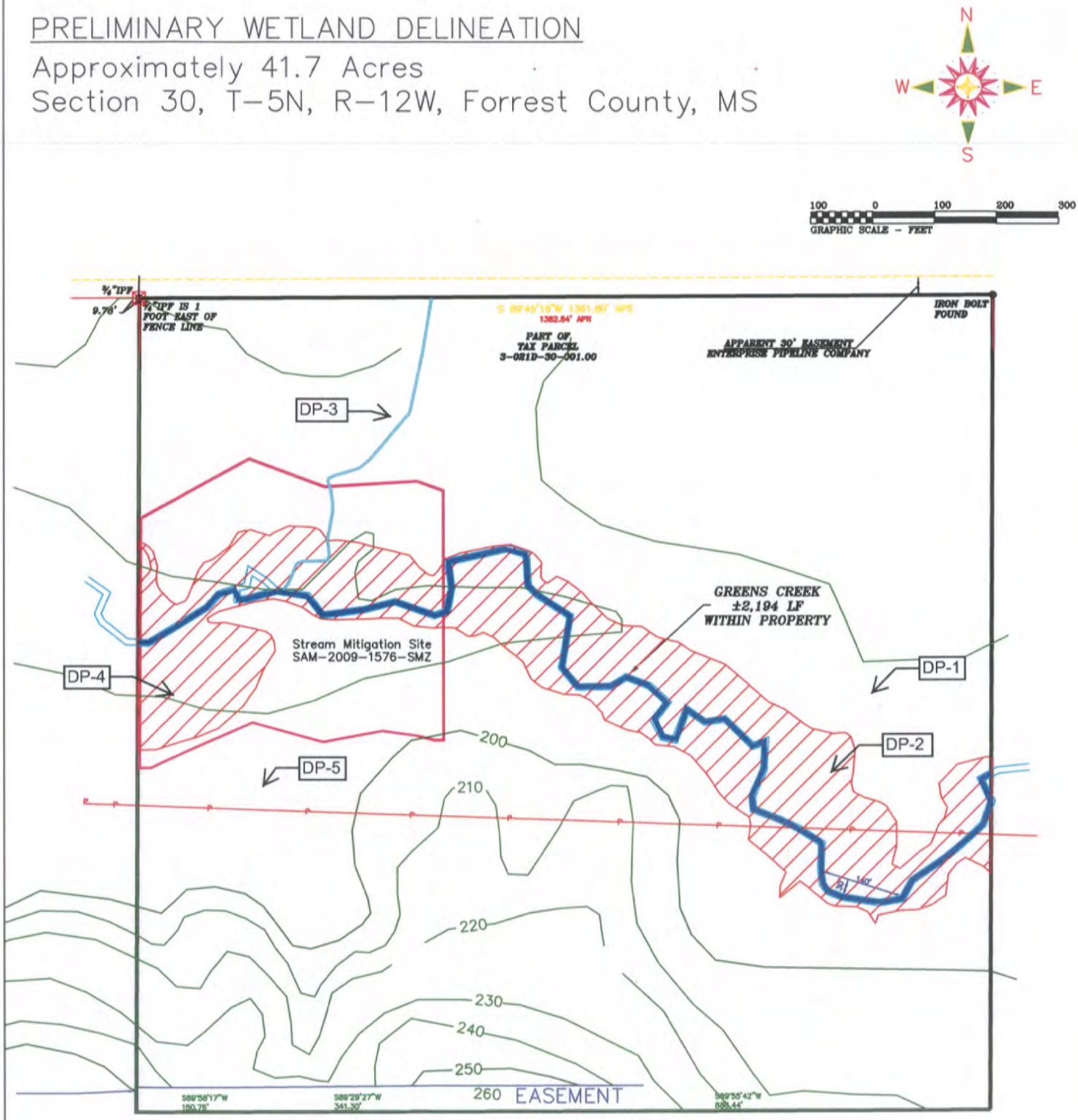

Stream Mitigation Site
SAM-2009-1576-SMZ

Greens Creek (Perennial)
Approximately 2,194 LF (±20' TB-TB)

Intermittent Stream
Approximately 597 LF (±6' Wide)

Delineated Wetland
Approximately 5.7 Acres
(Includes Area of Greens Creek)

Pittman Environmental Services, LLC
6-26-13
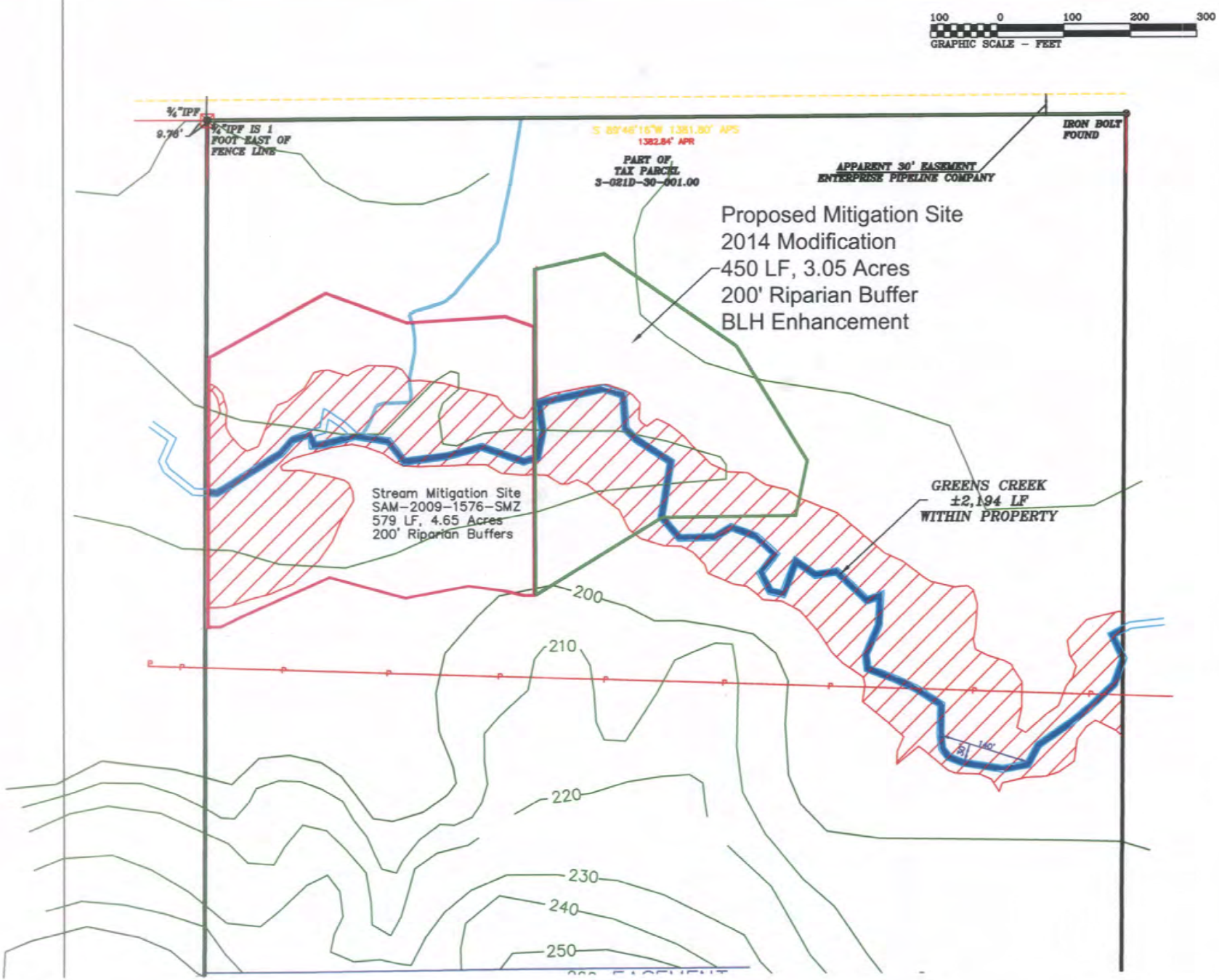
PROPOSED STREAM MITIGATION SITE
SAM-2009-1576-SMZ MODIFICATION