December 2012

Draft Environmental Assessment

Lease of U.S. Army Corps of Engineers Fee Property for Placement of Linwood Water Reclamation Facility Reclaimed Water Pipeline and Diffuser
City of Gainesville, Georgia

Prepared for

U.S. Army Corp of Engineers
Mobile District
Mobile, Alabama

Prepared by

Jacobs Engineering Group

Under contract to

City of Gainesville Public Utility Department

Table of Contents

1.0 INTRODUCTION 1
1.1 Proposed Action 2
1.2 Purpose and Need for the Proposed Action 2
1.3 Regulatory Authority 3
1.4 Location 4
2.0 DESCRIPTION OF THE RECOMMENDED PLAN 8
2.1 Wastewater Discharge to Lake Lanier 8
2.2 Wastewater Treatment 12
2.3 Diffuser Location 13
2.4 Management of Excavated Material 14
3.0 ALTERNATIVES TO THE RECOMMENDED PLAN 15
3.1 Alternatives Analysis Process 15
3.2 “No Action” Alternative 15
3.3 No Wastewater Discharge Alternative 15
3.4 Wastewater Treatment Alternatives 16
3.5 Diffuser Location Alternative 17
4.0 AFFECTED ENVIRONMENT 18
4.1 General Environmental Setting 18
4.2 Soils 20
4.3 Wetlands 21
4.4 Floodplain 21
4.5 Flora 22
4.6 Fauna 24
4.7 Endangered and Threatened Species 25
4.8 Cultural Resources 29
4.9 Noise 30
4.10 Air Quality 31
4.11 Water Quality 32
4.12 Groundwater 35
4.13 Recreation 35
4.14 Hazardous and Toxic Materials/Wastes 37

5.0 ENVIRONMENTAL IMPACTS OF THE RECOMMENDED PLAN 39
5.1 General Environmental Stetting 39
5.2 Soils 39
5.3 Wetlands 40
5.4 Floodplain 40
5.5 Flora 40
5.6 Fauna 40
5.7 Endangered and Threatened Species 41
5.8 Cultural Resources 41
5.9 Noise 41
5.10 Air Quality 42
5.11 Water Quality 42
5.12 Groundwater 45
5.13 Recreation 45
5.14 Hazardous and Toxic Materials/Wastes 45
5.15 Environmental Justice 45
5.16 Protection of Children 49
5.17 Cumulative Impacts Summary 49
6.0 ANY IRREVERSIBLE OR IRRETRIEVABLE COMMITMENTS WHICH WOULD BE INVOLVED SHOULD THE RECOMMENDED PLAN BE IMPLEMENTED 52
7.0 ADVERSE ENVIRONMETAL EFFECTS WHICH CANNOT BE AVOIDED 53
8.0 THE RELATIONSHIP BETWEEN LOCAL SHORT-TERM USES OF MAN"S ENVIRONMENT AND MAINTENANACE AND ENHANCEMENT OF LONG-TERM PRODUCTIVITY 54
9.0 COORDINATION 55
10.0 REFERENCES 56

ENVIRONMENTAL ASSESSMENT
FOR
LEASE OF U.S. ARMY CORPS OF ENGINEERS FEE PROPERTY FOR PLACEMENT OF LINWOOD WATER RECLAMATION FACILITY RECLAIMED WATER PIPELINE AND DIFFUSER
CITY OF GAINESVILLE, GEORGIA

1.0 INTRODUCTION

This Environmental Assessment (EA) was prepared utilizing a systematic, interdisciplinary approach integrating the natural and social sciences and the environmental design arts with planning and decision-making. Under the National Environmental Policy Act (NEPA) of 1969, an EA is a concise public document that briefly provides sufficient evidence and analysis for determining whether to prepare an Environmental Impact Statement (EIS) or issue a Finding of No Significant Impact (FONSI).

This EA has been prepared to analyze the potential natural and socioeconomic environmental effects of routing a reclaimed water pipeline and diffuser across government fee lands managed by the U. S. Army Corps of Engineers (USACE), Mobile District at Lake Sidney Lanier (Lake Lanier), Georgia (**Figure 1.1-1**, Project Location Map). The City of Gainesville, Georgia (City) owns and operates the Linwood Water Reclamation Facility (LWRF) and is upgrading this facility to improve discharge quality and increase treatment capacity. Previous investigations by the City and the Georgia Environmental Protection Division (EPD) identified a continued discharge of highly treated effluent to Lake Lanier as the most suitable option for returning reclaimed water to the Chattahoochee River Basin (JJG 2001). This option was ratified when the EPD issued National Pollutant Discharge Elimination System (NPDES) Permit No. GA0020168 on April 18, 2006 for the LWRF. This is a permit program that authorizes point source discharges into open waters. This permit authorizes a maximum discharge of 7 million gallons per day (MGD) to Lake Lanier. No legal challenges to the NPDES permit were received during the public comment period, and the required improvements to the LWRF are now under construction.

In January 2000, EPD established Lake Lanier Water Quality Standards, which defined the water quality management goals for the Lake. Associated with these standards, EPD established new effluent quality requirements for the City's wastewater treatment facilities. In response to EPD's requirements for enhanced treatment, the City implemented a plan to expand and upgrade the LWRF. These improvements are necessary to meet the increasingly stringent regulatory requirements for discharge into the Lake. Additionally, more treatment capacity will be provided for future flows.

The City is planning to improve the LWRF to a maximum monthly capacity of 5 MGD. The facility is designed with the capability for expansion to 7 MGD. The EPD has issued an NPDES permit for both 5 MGD and 7 MGD for this facility. The new treatment works will incorporate

state of the art treatment technology to produce a high-quality effluent that will meet or exceed the NPDES permit requirements.

The release of reclaimed water to Lake Lanier has been identified under water and wastewater plans prepared pursuant to the Metropolitan North Georgia Water Planning District Act (MNGWPD; Official Code of Georgia Annotated [O.C.G.A.] 12-5-570 et seq) as one of the key components of the overall regional strategy for water resource management. Discharge of reclaimed water into Lake Lanier would avoid interbasin transfer and provide flexibility in managing water into the lake through increased lake volume. Regionally, the application of indirect reuse – the return of highly treated water to regional storage reservoirs (including Lakes Lanier and Allatoona) – is critical for meeting future water supply demands in North Georgia, according to the EPD and the MNGWPD. Retaining water within the basin is critical for meeting current and future needs of the various designated uses of the Chattahoochee River Basin system in Alabama, Florida, and Georgia.

1.1 Proposed Action

The City has an existing effluent discharge pipeline and diffuser that crosses government fee lands managed by the USACE Mobile District Office at Lake Lanier. The pipeline and diffuser discharges treated wastewater from the existing LWRF to Lake Lanier. This pipeline and diffuser were constructed in the mid 1950s. The original outfall is a three-port diffuser, however, two of the ports are silted over (Limno-Tech Inc 1998). The remaining functional port is on a 24-inch diameter pipe and is located approximately 300 feet from the bank. The effluent is discharged vertically from this port. The water depth at the discharge location is about 81 feet and the discharge port is approximately 1.6 feet above the lake bottom.

The City is proposing to construct, operate and maintain a new 36-inch reclaimed water pipeline and diffuser along a similar alignment to the existing pipeline and diffuser into Lake Lanier. The proposed action involves a new pipeline that will transport reclaimed water from the LWRF to an improved diffuser placed at the bottom of Lake Lanier. The new pipeline and diffuser will be constructed perpendicular to the shoreline of the lake and will be located parallel to and approximately 400 feet to the north of the existing effluent outfall and diffuser. The new pipeline and diffuser will extend approximately 860 feet into the lake. Of the 860 feet, approximately 495 feet is the required piping and approximately 365 linear feet is the actual diffuser structure.

1.2 Purpose and Need for the Proposed Action

As a result of water quality modeling of Lake Lanier, EPD has increased the level of treatment required for local governments discharging wastewater into the lake. The LWRF was originally constructed as a trickling filter plant, which cannot meet the more stringent NPDES permit limits and Lake Lanier Water Quality Standards set by EPD. Therefore, the plant is being replaced with a facility that uses modern treatment processes. The City is currently upgrading the LWRF to both comply with new discharge standards and to accommodate projected future wastewater treatment capacity needs.

The purpose and need of the proposed project is to provide a technology upgrade to the current, partially functioning diffuser system that will match the technology upgrades to the LWRF and allow the City to meet increasingly stringent NPDES Permit Limits and Lake Lanier Water Quality Standards. Additionally, the upgrade will be designed to return a higher volume of flow to Lake Lanier that will match the City's 7 MGD treatment capacity for future flows. There is no practicable way to place a pipeline and diffuser into Lake Lanier that does not cross USACE fee lands and the Lake Lanier bottom. Therefore, the City must obtain an easement from the USACE Mobile District. Under the proposed project, USACE would grant an easement across its property to allow the routing of the pipe to reach the specified discharge location. The easement includes crossing government fee lands as well as portions of the Lake Lanier bottom. The City is also anticipating that future permit requirements may necessitate the use of an effluent diffuser.

1.3 Regulatory Authority

The proposed action is subject to regulation through the USACE, Mobile District, under Section 404 of the Federal Water Pollution Control Act of 1972, as amended, commonly called the Clean Water Act (CWA). The diffuser would be placed in Lake Lanier, which is subject to Section 404 jurisdiction. A Section 404 Nationwide Permit has been issued by the USACE for construction of the pipeline and diffuser through the Section 404 jurisdictional area. In the USACE Nationwide Permit (NWP) Program in 33 *Code of Federal Regulations* (CFR) Part 330, NWP 12 authorizes the construction of pipelines and associated outfall structures. Nationwide permits are subject to certain general and regional conditions and may also have a notification requirement. The authorizing USACE district may impose additional conditions. NEPA analysis has been completed for the NWP Program and the activities authorized under the NWPs have been determined to have no significant direct, indirect, or cumulative environmental impacts, provided that all applicable conditions are met.

NEPA requires federal agencies to consider environmental consequences in their decision-making process. The Council on Environmental Quality (CEQ) issued regulations on implementing NEPA that include provisions for both the content and the procedural aspects of the required environmental analysis. CEQ regulations for implementing NEPA apply to this project, along with USACE regulations in 33 CFR 230.

Normally, activities authorized under NWPs are not subject to separate NEPA analysis absent an additional federal nexus, or if part of a larger project, subject to a federal action. The additional federal nexus for the proposed project is the granting of an easement to cross government land managed by the USACE Mobile District. USACE regulations on implementing NEPA (33 CFR 230) provide for categorical exclusions from NEPA documentation for actions that, when considered individually and cumulatively, do not have significant effects on the quality of the human environment. Categorical exclusions are provided for minor utility distribution and collection lines with only minor disturbances to the earth, air, or water. However, the District Engineer has determined that public interest factors and the potential for impact to the Lake Lanier Shoreline Management Plan warrant preparation of a more rigorous NEPA document for the Proposed Action. For this reason, USACE has decided that an EA is the appropriate NEPA document to address the direct, indirect, and cumulative impacts of the construction and

operation of a replacement outfall structure on the aquatic environment under the management responsibility of the Mobile District.

In addition to complying with implementing regulations from CEQ and USACE, completion of the NEPA analysis involves coordination among federal and state governmental agencies and direction by federal statutes and Executive Orders (EOs).

The State of Georgia has principal authority and responsibility to enforce Georgia laws on Lake Lanier. The State has its own water quality control law, which establishes enforcement authority through the EPD. The EPD also has delegated authority from the US Environmental Protection Agency (EPA) to implement and enforce the CWA within the State of Georgia. A major component of this federal law involves the NPDES permitting program. The EPD has authority to establish state water quality standards for the State of Georgia and to regulate discharges under the approved NPDES permit program.

1.4 Location

The LWRF is located on Linwood Drive approximately 4,500 linear feet west of its intersection with Thompson Bridge Road [State Route (SR) 60] in Gainesville, Hall County, Georgia. The facility is located on the Gainesville, Georgia 7.5-minute series US Geological Survey (USGS) topographic map (**Figure 1**, Project Location Map). According to the 1974 Hydrologic Unit Map of Georgia, the LWRF is located in the South Atlantic-Gulf Unit Code 03130001-139 Upper Chattahoochee River Basin (**Figure 2**, Hydrologic Unit Map). The project area is located within the Piedmont physiographic region of Georgia.

The LWRF service area has been expanded beyond the original boundary (Lake Lanier), to the north and west of the Chattahoochee Country Club (**Figure 3**, LWRF Service Area). These areas are not within the Gainesville city limit, but the City of Gainesville Public Utilities Department recently determined that these areas would be serviced by the LWRF. The approximate northern boundary of the service area is now near the intersection of Price Road (SR 136) and Thompson Bridge Road (SR 60); the western boundary on the north side of Lake Lanier includes service to the Chestatee High School, Chestatee Middle School, and Sardis Elementary School area. On the south side of Lake Lanier from the northeastern corner of the study area, the boundary generally follows Cry Creek and SR 11/Cleveland Highway, then Park Hill Drive to Green Street. The boundary then generally follows Green Street south to Academy Street and West Academy Street to Jesse Jewell Parkway. The boundary then follows the Parkway for a short distance, turns west and crosses Pearl Nix Parkway. The boundary then follows Shallowford Road for a relatively short distance then follows the Dawsonville Highway to Ahaluna Drive. The boundary then follows Ahaluna to its end then crosses over a cove created by a small creek feeding into Lake Lanier.

Reclaimed water from the City LWRF is currently discharged through a submerged outfall into Lake Lanier. The outfall is located just offshore from the existing treatment facility, approximately one mile downstream from the Thompson Bridge.

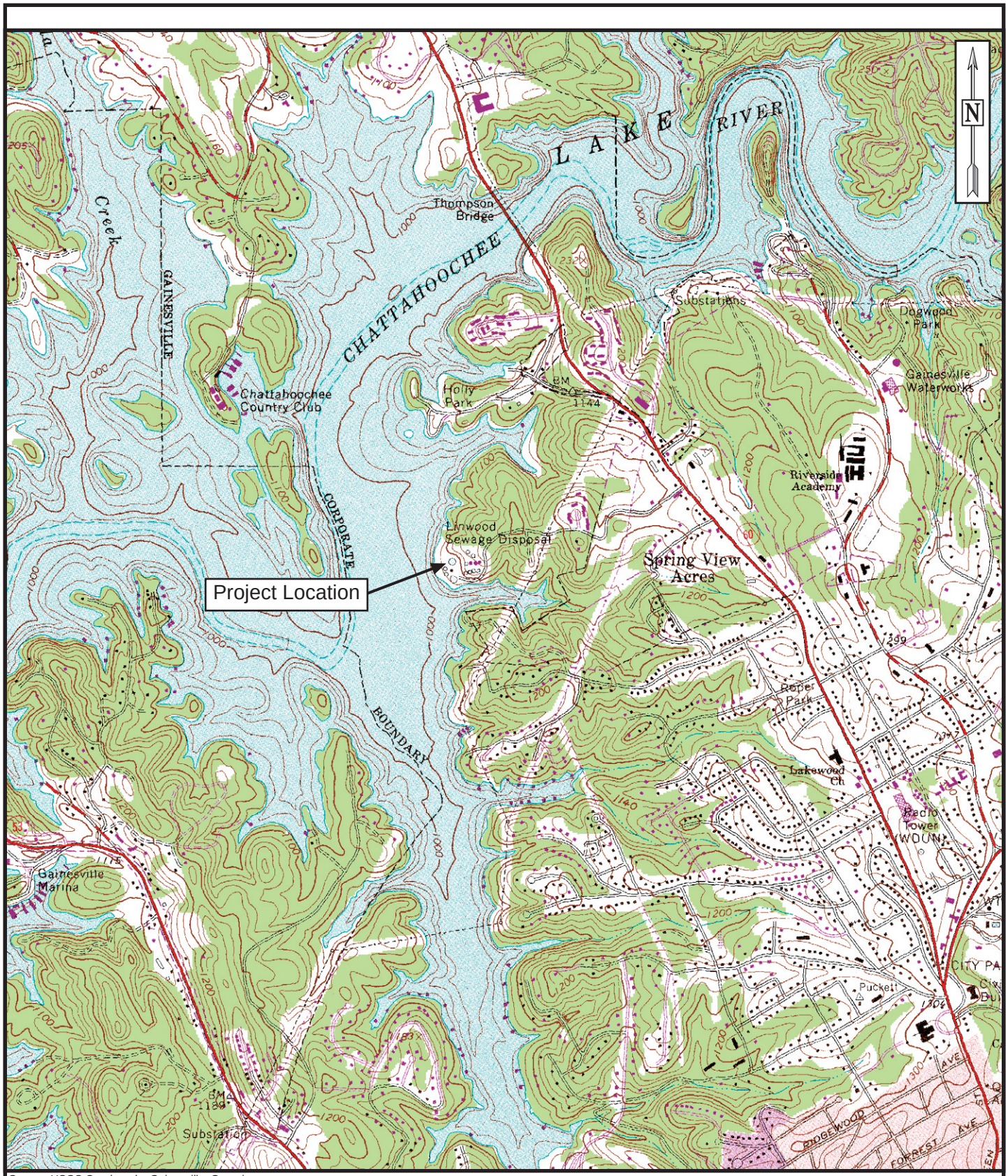

Source: USGS Quadrangle, Gainesville, Georgia

JORDAN JONES & GOULDING

Linwood Water Reclamation Facility
Reclaimed Water Pipeline and Diffuser
Environmental Assessment

Project Location Map

Date:	April 2007
Scale:	1" = 2,000'
Job No.:	2051.239

Figure 1

2051_239_Figures.fh11

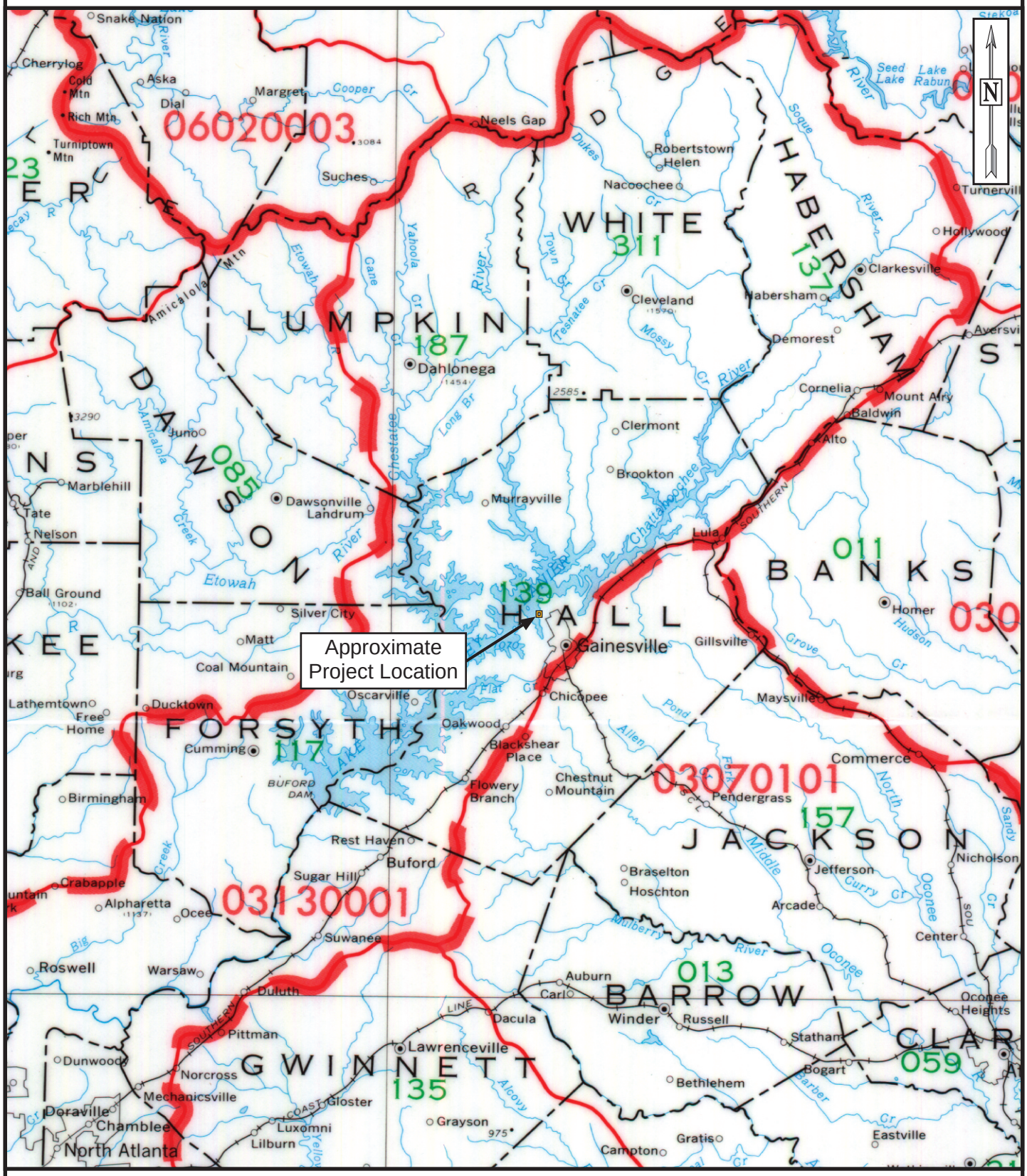

JORDAN JONES & GOULDING

Linwood Water Reclamation Facility
Reclaimed Water Pipeline and Diffuser
Environmental Assessment

Hydrologic Unit Map

Date: April 2007
Scale: 1" = 8 Miles
Job No.: 2051.239

Figure 2

2051_239_Figures.fh11

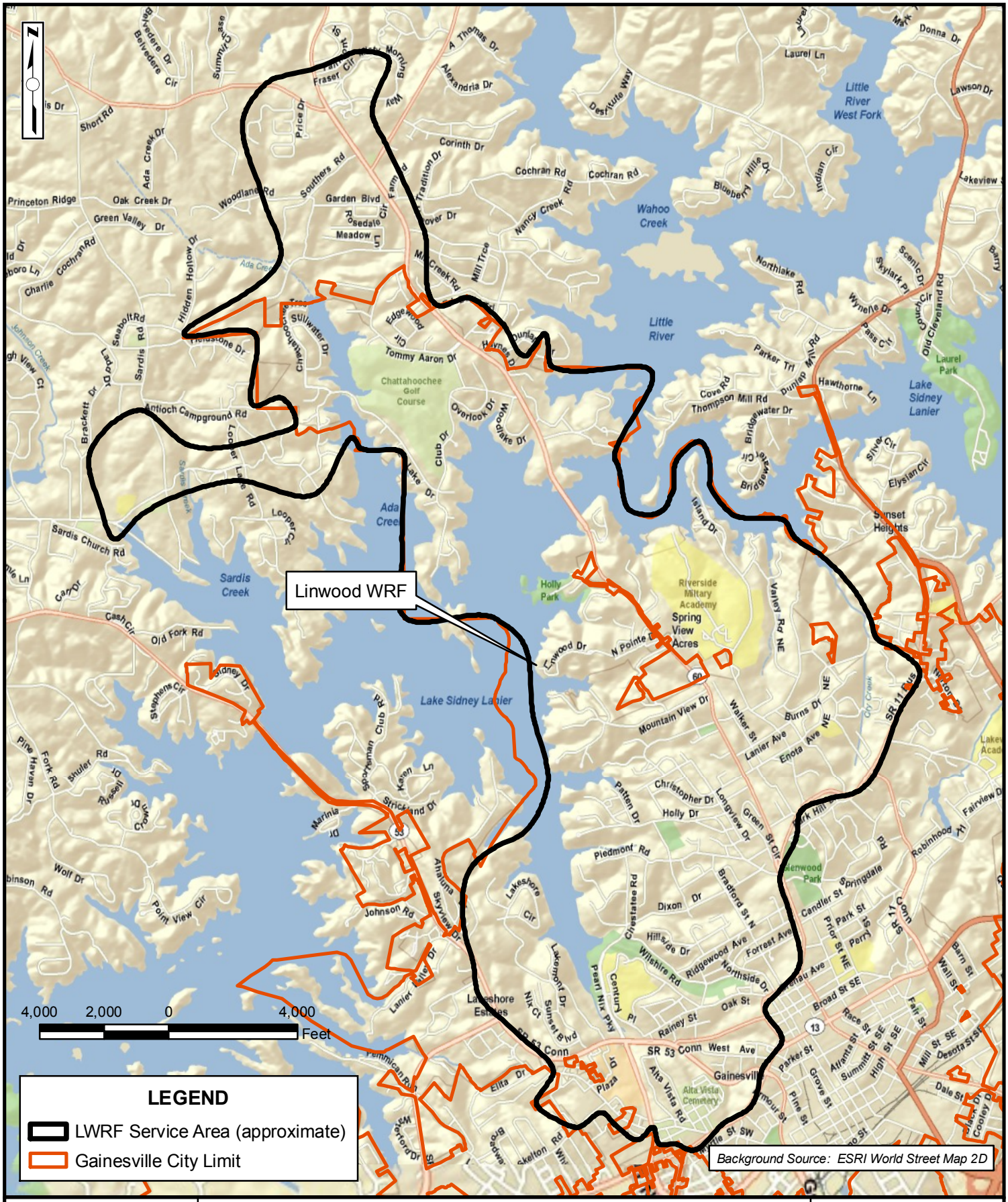

JJG	LINWOOD WATER RECLAMATION FACILITY RECLAIMED WATER PIPELINE AND DIFFUSER ENVIRONMENTAL ASSESSMENT	Date: December 2012 Scale: 1" = 4,000' Project: JJ205139
	LOCATION OF LINWOOD WRF	Figure 3

2.0 DESCRIPTION OF THE RECOMMENDED PLAN

The recommended plan for the City's wastewater management includes wastewater discharge to Lake Lanier, wastewater treatement and construction of the proposed diffuser.

2.1 Wastewater Discharge to Lake Lanier

Wastewater discharge to Lake Lanier is the recommended plan for the City's wastewater management. The new outfall/diffuser will be located parallel to and approximately 400 feet to the north of the existing reclaimed water pipeline and diffuser and will extend approximately 860 feet into the lake (**Figure 4a**, Effluent Diffuser-Plan). Of the 860 feet, approximately 495 feet is the required piping and approximately 365 linear feet is the actual diffuser structure. The proposed diffuser will be located at an elevation of approximately 1,010 feet above mean sea level (MSL), which is 61 feet below summer pool. The profile of the pipeline and diffuser is shown on **Figure 4b,** Effluent Diffuser Profile, and the proposed precast concrete anchor collar pipeline details are shown on **Figure 4c,** Anchor Collar Effluent Diffuser. By continuing to return this highly treated reclaimed water to the lake, it will be retained within the Chattahoochee River Basin system for other uses.

No long-term adverse environmental effects of expanding the LWRF and implementing additional deep-water discharge to Lake Lanier were identified as a result of the proposed action (JJG 2001). The following discussion summarizes some of the key findings related to water quality in Lake Lanier with respect to the proposed outfall.

Phosporus
Phosporus is the key pollutant of concern in Lake Lanier, and levels are generally low in the open lake but higher in the embayments (Kundell 1998). Based on phosphorus levels alone, the trophic status of the lake is mesotrophic – a moderate rating indicating that water quality is generally good.

Fecal Coliform
Historical data since 1973 by the Clean Lakes Group showed that the high bacterial densities in streams and the lake were unrelated to municipal discharges but were mostly associated with other activities common in the Lake Lanier watershed. Non-point sources, most notably septic system drain fields and runoff from agricultural operations, were cited as possible sources.

At the LWRF, the multiple barriers that reduce or remove enteric organisms will include biological treatment, chemical precipitation, membrane filtration, and UV disinfection. This combination of processes will produce reclaimed water with fecal coliform levels below the proposed limits set by EPD and will not degrade the lake's quality. In addition to the multiple processes as barriers to pollutants, the plant will have redundant units such that if a single unit is out of service the remaining units will continue to treat the full design flow. The facilities will have at least two independent power supply feeds to ensure uninterrupted power is available for all key processes.

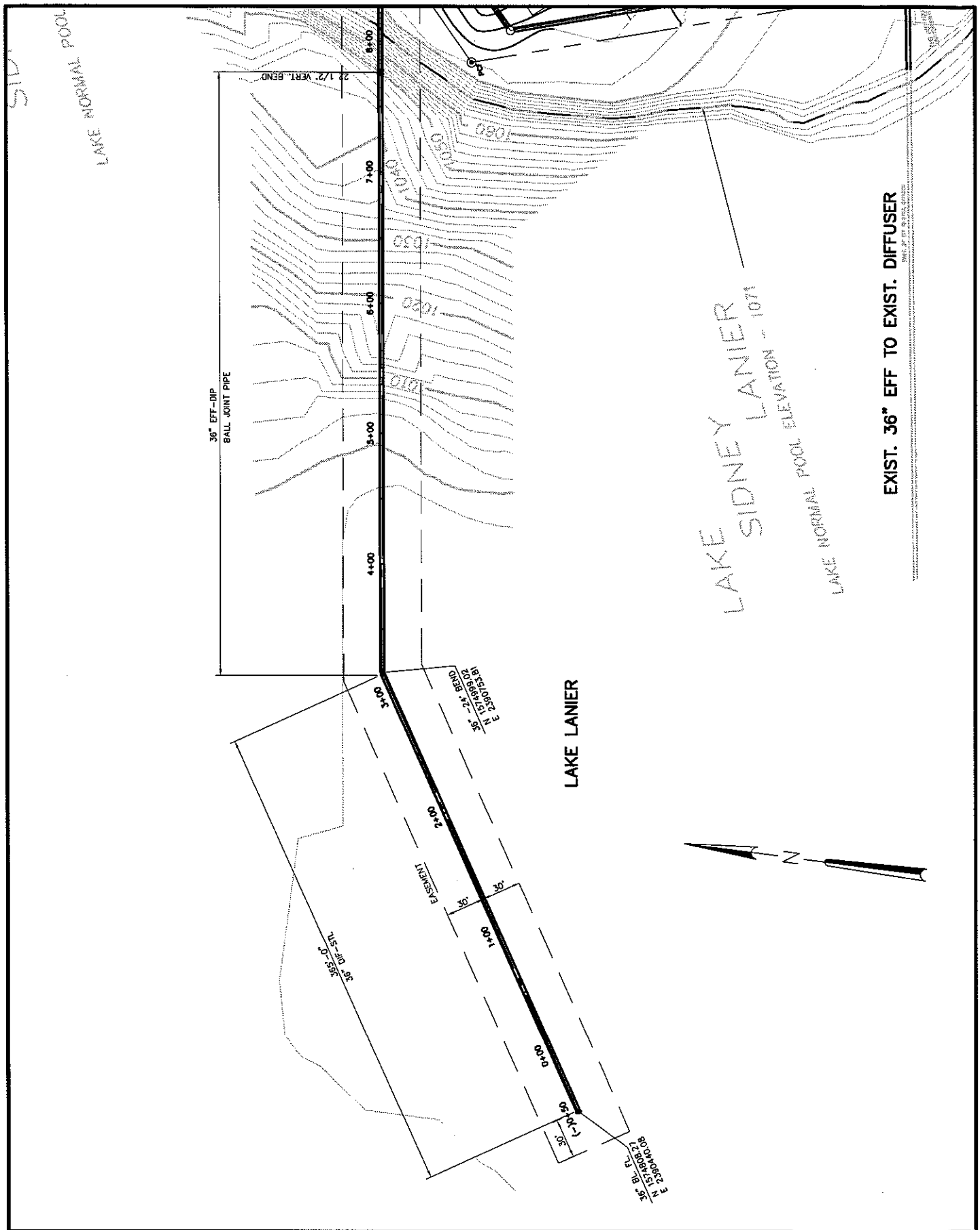

go!206R04A.dwg 03.30.07

LTAYLOR

JORDAN JONES & GOULDING

LINWOOD WATER RECLAMATION FACILITY
RECLAIMED WATER PIPELINE AND DIFFUSER
ENVIRONMENTAL ASSESSMENT

PROPOSED 36-INCH
EFFLUENT DIFFUSER-PLAN

DATE : APRIL 2007
SCALE : AS SHOWN
JOB NO.: 2051.239

FIGURE 4a

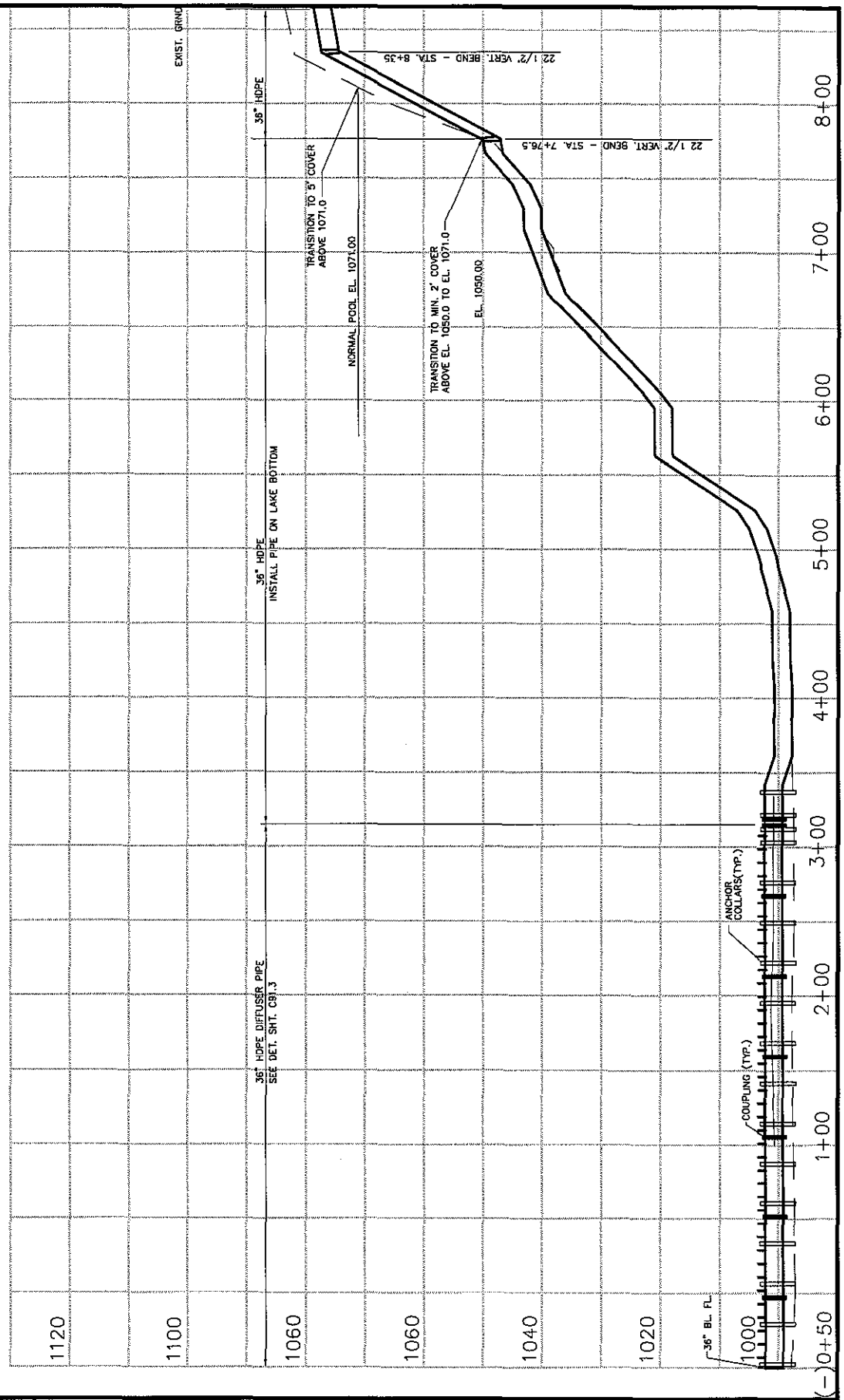

gal2D6R04B.dwg 03.30.07

LTAYLOR

JORDAN JONES & GOULDING

LINWOOD WATER RECLAMATION FACILITY
RECLAIMED WATER PIPELINE AND DIFFUSER
ENVIRONMENTAL ASSESSMENT

PROPOSED 36-INCH
EFFLUENT DIFFUSER-PROFILE

DATE : APRIL 2007
SCALE : AS SHOWN
JOB NO.: 2051.239

FIGURE 4b

gai206R003.dwg 03.30.07

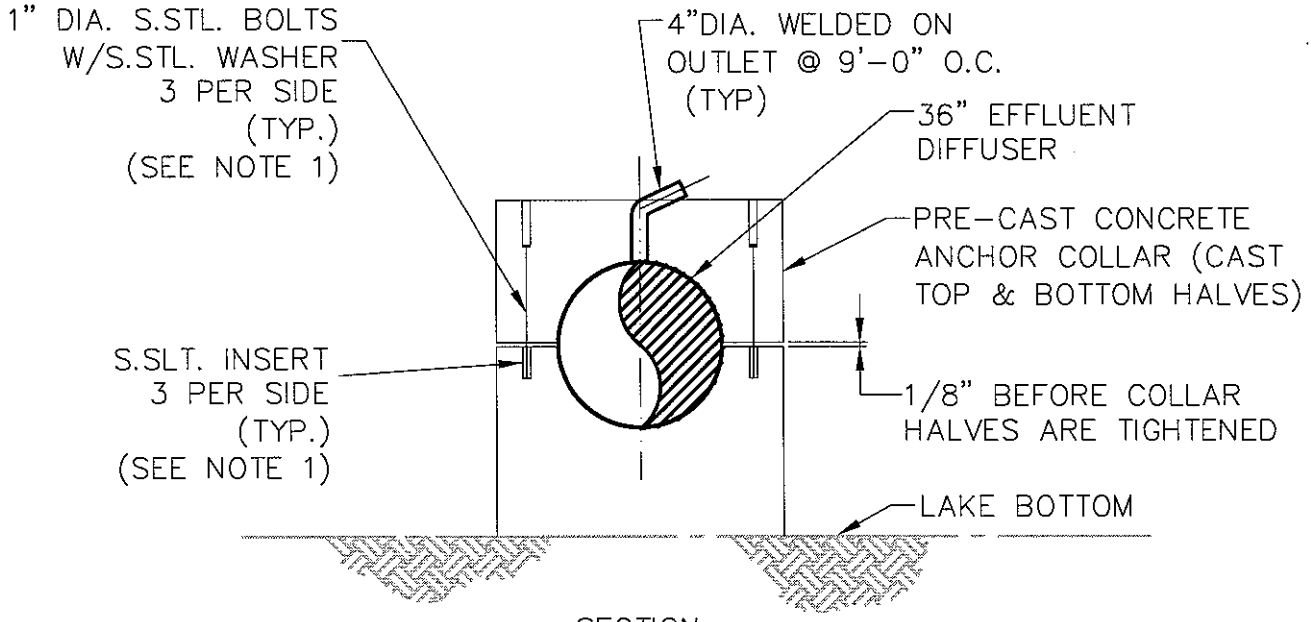

SECTION

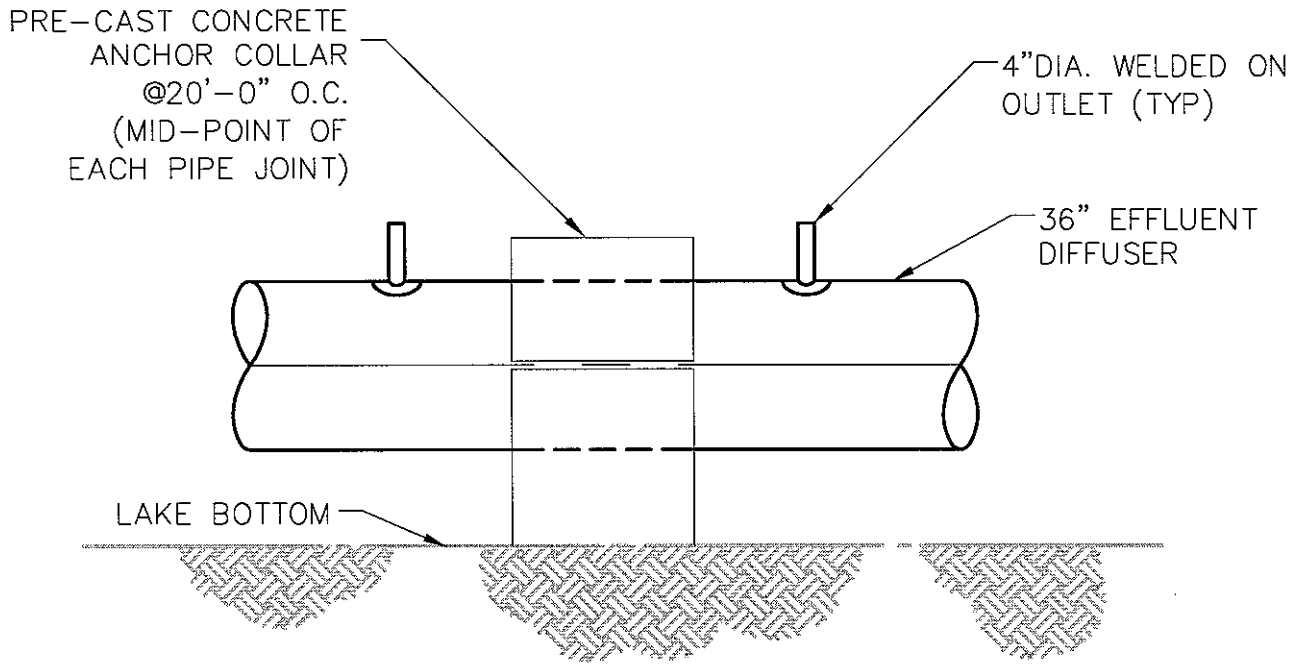

ELEVATION

NOTE

1. STAINLESS STEEL BANDS- 3 PER SIDE- ARE ACCEPTABLE IN LIEU OF BOLTS SHOWN.
2. DIFFUSER SECTION WILL BEGIN AT A DISTANCE OF APPROX. 500 FT. FROM SHORELINE AND EXTEND TO APPROX. 870 FT. FROM SHORELINE. THERE WILL BE (40)-4" DIA. DIFFUSER PORTS SPACED EVENLY AT 9 FT APART.

LTAYLOR

JORDAN JONES & GOULDING	LINWOOD WATER RECLAMATION FACILITY RECLAIMED WATER PIPELINE AND DIFFUSER ENVIRONMENTAL ASSESSMENT	DATE : APRIL 2007 SCALE : NONE JOB NO.: 2051.239
	PROPOSED PRECAST CONCRETE ANCHOR COLLAR EFFLUENT DIFFUSER	FIGURE 4c

Temperature and Dissolved Oxygen

Water quality impacts on aquatic life will be limited to minor increases in temperature in the immediate area of the outfall in Lake Lanier. Potential impacts would be minimized through the design and installation of an appropriate diffuser. The reclaimed water released will be much higher in dissolved oxygen than the lake water, providing a net benefit to aquatic life in the lake.

The design criteria for the LWRF stipulates, "at a sampling point 3 meters from the outfall diffuser, the temperature shall not exceed 90 degrees Fahrenheit (^{o}F) nor increase the lake ambient temperature more than 5 ^{o}F." Reclaimed water will meet or exceed this criterion before being discharged into the lake.

Conclusion

No measurable adverse impact to the water quality of Lake Lanier is expected from the proposed return of reclaimed water associated with the modifications to the LWRF. The release of reclaimed water would have the added benefit of providing clean water inflow for multiple uses, including recreation, water supply, fishing/wildlife, and hydropower.

The recommended plan of returning reclaimed water to Lake Lanier via the Linwood outfall/diffuser complies with the MNGWPD *Final Plan for Water Supply and Water Conservation* (MNGWPD 2003a). Although the existing diffuser can handle the proposed 5.0 MGD discharge from the LWRF, the proposed action will provide for much greater dispersion and dilution of reclaimed water and will significantly reduce the temperature affects of the discharge on lake water temperature.

2.2 Wastewater Treatment

No measurable adverse impact to the water quality of Lake Lanier is anticipated from the proposed return of reclaimed water associated with the modifications to the LWRF. The release of reclaimed water would have the added benefit of providing clean water inflow for multiple uses, including recreation, water supply, fishing/wildlife, and hydropower.

The City has also been required by the EPD to upgrade the treatment capability of its WRFs. In response to EPD's requirement for enhanced treatment, the City began developing projects that would bring their treatment facilities into compliance with the new requirements.

An evaluation of biological treatment alternatives was conducted (JJG 2001; JJG 2004) for the LWRF. In the evaluation the immersed membrane bioreactor process was determined to be the recommended plan for biological treatment at the LWRF. This treatment involves two-stage immersed membrane biological reactors (bioreactors) in a rectangular configuration with alum addition for phosphorus removal. The process selection was based on non-economic factors such as flexibility, providing multiple barriers to pathogens, and potential for reuse. The immersed membrane process has a small footprint that leaves more land available for the inclusion of other treatment processes in the future. With the use of membranes, direct or blend pond type reuse may be considered by the City in the future.

2.3 Diffuser Location

Discharge locations for the proposed outfall/diffuser were identified in the vicinity of the existing outfall/diffuser and adjacent facility. Constructing the proposed outfall/diffuser adjacent to the LWRF would have minimal environmental and socioeconomic impacts.

The CORMIX 2 mixing zone model was used to design a multi-port diffuser that would meet design goals for mixing and lake temperature impacts. The design criteria established for the diffuser is as follows:

- At a point 3 meters from the diffuser, the increase in the lake ambient water temperature due to the discharge from the diffuser shall not be more than 5 ^{o}F.

- The diffuser shall attain a minimum dilution factor of 20 (which corresponds to 5 percent effluent) at a point 3 meters from the diffuser under worst-case conditions, which are summer temperature conditions at a flow rate of 5 MGD.

A study was conducted by JJG in 2003 to establish the new outfall discharge location and to develop the diffuser configuration to achieve the above stated temperature and dilution requirements. The study used the CORMIX 2 model to analyze various diffuser configurations to determine the combination of design elements that would meet the stated design criteria. Based on the results, the recommended design configuration is detailed in **Table 1**.

Table 1
Final Design Configuration

(1) Outfall discharge depth	Approximately 69 ft.
(2) Number of diffuser ports	40 - Spaced evenly at 9 ft. apart
(3a) Distance of the closest diffuser port from the shoreline	534 ft.
(3b) Distance of the furthest diffuser port from the shoreline	894 ft.
(4) Size of each diffuser port	4-in. diameter
(5) The orientation of the diffuser to the ambient current direction (beta angle)	45°
(6) Discharge vertical angle (theta angle)	45°
(7) Alignment angle of diffuser pipe (gamma angle)	90°
(8) Nozzle direction	Fanned out (see Note 1)
(9) Height of diffuser port above lake bottom	5 ft.

Note 1: The diffuser nozzle arrangement is a fanned design. This design results in the middle nozzle being oriented at 90° to the diffuser pipe, with each succeeding nozzle on either side being rotated incrementally to create the fanned arrangement.

The study indicates that none of the evaluated discharge rates cause any increase in the ambient temperature above the design criteria (i.e., approximately no greater than 5°F at a location of 3 meters from the discharge point). This holds true for both winter and summer months. The study results also show that a dilution factor of 21.67 is achieved during the critical summer condition. This is the minimum dilution achieved at the 3-meter location; therefore, the criterion of a minimum dilution factor of 20 is achieved.

2.4 Management of Excavated Material

Construction of the project would require excavation of earth and rock below the 1073-foot contour line of Lake Lanier. Based on past projects coordinated through the USACE, the jurisdictional impact area for Lake Lanier begins at the 1073-foot contour line and proceeds into the lake. Construction of the outfall would require opening a trench within the lake for approximately 865 linear feet.

While open-cut construction would occur, portions of the outfall piping would be laid directly on the lakebed in an effort to reduce impacts. The pipe will be laid on the bottom of the lakebed at elevations 1050 feet above MSL. Between elevations 1050 feet above MSL and 1071 feet above MSL, the pipe will be installed by open cut methods with a depth of cover of 2 feet above MSL. At elevations of 1071 feet MSL and higher, the pipe will be installed by open cut methods with a depth of cover of 5 feet MSL. It should be noted that the pipe will not be laid at just a single elevation. It will be laid at the bottom of the Lake all the way to a spot near the original channel of the Chattahoochee River. When, or if, the Lake drops below any given elevation at the bottom where the pipe is located, it will be exposed until such time that the water elevation would cover it back up. This is the same way the existing pipe was installed when the LWRF was built in early 1950s.

While the exact method of excavation to be used by the contractor cannot be predicted, it is anticipated that a traditional clamshell bucket will be used to excavate the trench. A total of approximately 630 cubic yards of material will be excavated. The clamshell will operate from a barge. Material excavated from the trench will be removed to upland areas and disposed offsite at a regulated landfill. Strata studies indicated that rock should not be present within the open-cut area; however, should rock be encountered, blasting may be required. The USACE will be notified prior to blasting activities occurring. As with previous City projects, blasting (if required) will be conducted in concurrence with federal and state laws.

The pipe will be bedded in gravel and the trench will be backfilled with crushed stone. The crushed stone backfill material will be a graded aggregate conforming to the Georgia Department of Transportation Standard Specifications for Construction of Roads and Bridges, 800.1, size No. 57, Group II. No change in pre-construction contours will occur as a result of installing the outfall piping and diffuser.

3.0 ALTERNATIVES TO THE RECOMMENDED PLAN

3.1 Alternatives Analysis Process

In recent years, the City has been actively exploring the development of additional capacity in its WRFs to meet expected increases in wastewater treatment demands due to increased population growth in the area. In addition to the need for additional treatment capacity, the City has been required by EPD to upgrade the treatment levels at City facilities. In response to EPD's requirement for enhanced treatment, the City is developing projects that will ensure its treatment facilities comply with the new requirements. These proposed upgrade projects are part of the City's commitment to north Georgia's overall water quality management program and, in particular, to the water quality management goals for Lake Lanier.

A wastewater treatment alternative evaluation was conducted as part of the City's Wastewater Management Plan to identify the best options for wastewater management. The evaluation involved a comparison of three different plant locations: Flat Creek, Linwood, and the City-owned Allen Creek site, as well as combinations of several different plant capacities for each site. The evaluation determined that the Flat Creek WRF site and the LWRF site would provide wastewater treatment for the City through the year 2020. More recent projections that are currently being developed indicate a 20-year total capacity need of approximately 30 MGD. It is expected that the Flat Creek WRF and LWRF sites would continue to be able to provide this capacity.

The City's WRF expansion process included a wastewater treatment alternative evaluation designed to identify the best options for the City's wastewater management. This section discusses the alternatives to the recommended plan that were identified in the City's wastewater management plan, including the no action alternative.

3.2 "No Action" Alternative

The existing LWRF outfall is capable of discharging the proposed maximum monthly capacity of 5 MGD. The original diffuser, constructed in the 1950s, is a three-port diffuser. The no action alternative for the project is to continue utilizing the existing outfall/diffuser, which would have no affect on the functions of the upgraded LWRF. The existing diffuser can continue to function with the proposed expansion levels through the year 2020. However, it would not meet the purpose and need of an effluent diffuser and delivery pipeline that provides better distribution of reclaimed water into Lake Lanier and thereby increase dilution and mixing in the immediate vicinity of the diffuser. It would not comply with EPD's new requirements for enhanced treatment and the overall water quality management goals for Lake Lanier.

3.3 No Wastewater Discharge Alternative

Under the CWA, the antidegradation policy requires that NPDES permit applicants develop a no-discharge alternative, such as land application, which would be cost prohibitive and would be considered an economic hardship on the community. The City evaluated land application

options as an alternative to discharge for both the Flat Creek and Linwood wastewater treatment facilities:

Alternative 1
An option for "split-stream" management of wastewater, i.e., treating and discharging a portion of the projected wastewater flow and treating and land applying the remaining portion.

Alternative 2
Land application of the entire wastewater effluent flow stream was also considered. This evaluation identified five potential sites for land treatment. As a result of these evaluations, the City purchased approximately 1,600 acres for land treatment of approximately 3 MGD of its projected wastewater flow stream. This capacity estimate is based on a system that would use slow rate land application of pre-treated wastewater and is based on an application rate of 1.1 inches of wastewater per week and a usable application area of 705 acres. The usable area estimate was based on land area remaining for irrigation after subtracting areas for pretreatment facilities, buffers, and unusable areas (wetlands, steep slopes, etc.). Based on the study, the projected wastewater treatment capacity for the City service area needed for the year 2020 is 25 MGD. Assuming site conditions similar to the existing 1,600-acre land treatment site discussed above, approximately 13,500 acres would be required for land application of the entire projected wastewater flow stream. However, the remaining potential sites that were evaluated were either unavailable or not large enough for land treatment for the total projected effluent flow.

Acquiring sufficient acreage to provide for land treatment for the total projected effluent flow from the City service area of 25 MGD would be costly and difficult. To assemble sufficient acreage for total land treatment would require acquisition of land currently used for residential and commercial purposes. Therefore, the alternative was not selected.

3.4 Wastewater Treatment Alternatives

The City has also been required by the EPD to upgrade the treatment capability of the WRFs. In response to EPD's requirement for enhanced treatment, the City began developing projects that would allow their treatment facilities to comply with the new requirements. An evaluation of biological treatment alternatives that were considered but rejected included:

Alternative 1
Non-enhanced biological phosphorus removal using oxidation ditches and alum addition for phosphorus removal.

Alternative 2
Three-stage enhanced biological phosphorus removal (EBPR) in an oxidation ditch configuration.

Alternative 3
Five-stage EBPR process (modified Bardenpho™) in an oxidation ditch configuration.

Because the wastewater treatment alternatives discussed above had similar life-cycle costs, the process selection was based on non-economic factors such as flexibility, providing multiple barriers to pathogens, and potential for reuse.

3.5 Diffuser Location Alternative

The only other Build Alternative is to convey discharge from the LWRF to the Flat Creek WRF. However, this alternative would require constructing pumping stations and pipelines to transport the flow from the LWRF to the Flat Creek WRF, which is cost prohibitive and would result in additional environmental impacts.

4.0 AFFECTED ENVIRONMENT

Section 4.0, Affected Environment, will cover the environmental conditions currently within the project area as the proposed project relates to General Environmental Setting, Soils, Wetlands, Floodplain, Flora, Fauna, Endangered and Threatened Species, Cultural Resources, Noise, Air Quality, Water Quality, Groundwater, Recreation, and Hazardous and Toxic Materials/Wastes.

4.1 General Environmental Setting

The LWRF is located on a peninsula formed by two unnamed tributaries feeding into Lake Lanier. Onsite land uses at the LWRF include several structures necessary for wastewater treatment and facility operation and include administrative and maintenance buildings.

A large forested area composed of mixed hardwoods and pines is located directly north of the LWRF and continues to the shoreline. The proposed easement along the government fees land is in the lake and is characterized by inundated soil conditions throughout the year. Dominant vegetation species include soft rush (*Juncus effusus*), shallow sedge (*Carex lurida*), seed-box (*Ludwigia* sp.), and broad-leaf cattail along edges of the open water. Nearby upland vegetation communities proximate to the project area consist of three types of habitat: developed and maintained ruderal, a littoral zone along the lake edge, and secondary-successional mixed hardwood and pine communities. At the LWRF site, there are two types of ruderal areas. One is used for recreation and access, the other is a graded slope located below the LWRF. Flora species in the recreation area include tall fescue (*Fescue* sp.), crabgrass (*Digitaria* sp.), planted ornamental oaks including red oak (*Quercus rubra*) and water oak (*Quercus nigra*), and American holly (*Ilex opaca*). Flora species found on the graded slope include broomsedge (*Andropogon virginicus*), blackberry (*Rubus* sp.), goldenrod (*Solidago* sp.), and dogfennel (*Eupatorium capillifolium*). The littoral zone is located along the edge of Lake Lanier and is characterized by an adjacency to water and sloped elevations. This area at the LWRF site is approximately 20’ wide, subject to erosion, and has a rocky surface including boulders. Canopy species include American sycamore (*Platanus occidentalis*), black willow (*Salix negra*), tulip poplar (*Liriodendron tulipifera L.*), American sweetgum (*Liquidambar styraciflua*), and river birch (*Betula nigra*). This area also included invasive species such as kudzu (*Pueraria lobata*), Chinese privet, and lespedeza (*Lespedeza cuneata*).

Surrounding Land Use

The study area is primarily located within the City Limits but includes some areas in the County. **Figure 5**, Land Use illustrates the land uses within the City portion of the study area. Property within the study area consists of typical urban development with most of the land being used for residential development of varying densities and parks, recreation, and conservation. Commercial areas are found in the southern part of the study area and along Thompson Bridge Road, with a smaller commercial area along Cleveland Highway. Land owned by local and state governments is located throughout the study area, as is institutional land consisting primarily of religious and educational facilities. All of the lands immediately surrounding the lake are owned by the USACE and are designated as conservation areas. Agricultural and industrial land uses make up small acreages within the study area. Table 2 below lists the study area land uses

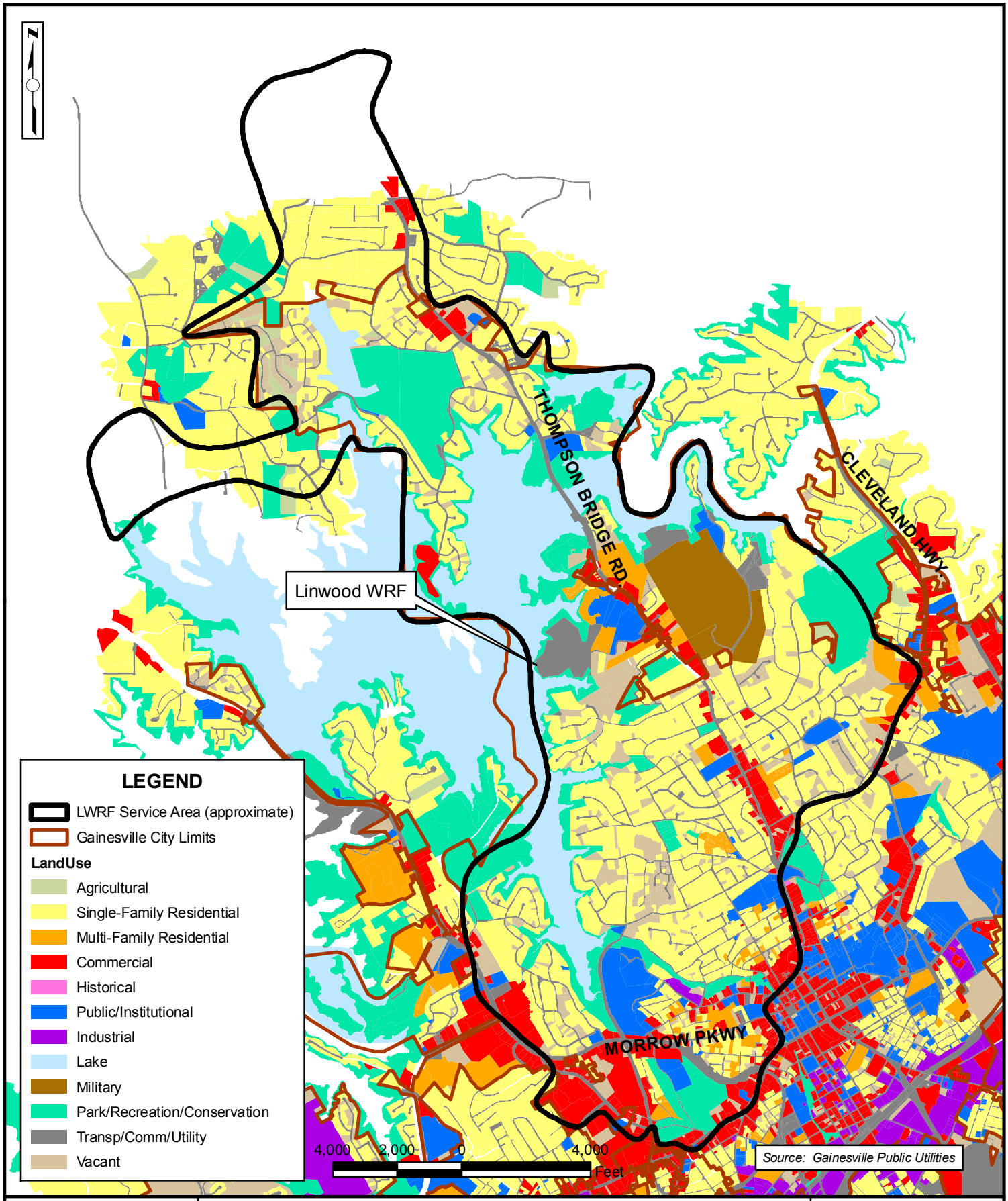

LINWOOD WATER RECLAMATION FACILITY
RECLAIMED WATER PIPELINE AND DIFFUSER
ENVIRONMENTAL ASSESSMENT

Date: December 2012
Scale: 1" = 4,000'
Project: JJ205139

LAND USE

Figure 5

with each designation's approximate acreage and percentage of the total study area. Land uses for the sections of the study area within the County were not available for inclusion in Figure 5, but recent aerial photography shows these areas as primarily comprised of single-family residential and some commercial development north of the Chattahoochee Country Club and single-family residential, institutional, and forested areas west of the Country Club.

All of the lands immediately surrounding the lake are owned by the USACE and are designated as conservation areas. Utilities and vacant land make up relatively small acreages within the study area. **Table 2** below lists the study area land uses with each designation's acreage and percentage of the total study area.

Table 2
Study Area Land Uses

Type	Acreage	Percentage
Agricultural	63	0.11%
Commercial	425	7.4%
Park/Recreation/Conservation	1,315	22.9%
Industrial	8	0.0%
Public/Institutional	245	4.2%
Single-Family Residential	2,240	39.1%
Multi-Family Residential	188	3.3%
Transportation/Utilities	530	9.2%
Military	206	3.6%
Vacant	510	8.9%

Data Source: City of Gainesville, 2012. Acreages and percentages are approximate.

4.2 Soils

Soils in the Lake Lanier area are derived from in-place weathering of underlying rock strata, except in the active floodplain of the lake, where soils consist of alluvial silts and sands. Lake Lanier area soils are all susceptible to erosion, with the degree of susceptibility dependent on erosion hazard, frequency and intensity of rainfall, steepness and length of slopes, and the kind and amount of ground cover.

The soils that overlie the Piedmont rocks are generally sandy loams and clays called saprolite. Saprolitic soils are formed by the chemical breakdown or decomposition of parent crystalline rocks. The red color of the soil is the result of weathering of underlying feldspar-rich igneous and metamorphic rocks (University of Georgia 2002).

Soils within the LWRF project area are in the Pacolet-Madison-Tallapoosa association. These soils are typically deep, well-drained soils found on narrow ridge tops and hillsides. Soils within the Pacolet-Madison-Tallapoosa association range from 10% on hillsides to 45% on steep ridge tops.

Prime or Unique Farmland

This project is being developed in compliance with the provisions of the National Farmland

Protection Policy Act of 1980. In accordance with 7 CFR Part 658, criteria have been applied to determine effects to farmland. A study of the project found that the soil in the area is Pacolet sandy loam. According to the US Department of Agriculture (USDA) Natural Resource Conservation Service (NRCS), this soil classification is not prime farmland or farmland of statewide importance.

Geology

Lake Lanier lies along the border of the Blue Ridge and Piedmont Physiographic Provinces. The Brevard Fault, running southwest to northeast, is a prominent geologic feature that marks the southern boundary of the Blue Ridge province (Seabrook 2006). A portion of the northern shoreline of Lake Lanier lies in the Blue Ridge Province, which is characterized by steep mountain slopes (700 to 4800 ft MSL) with narrow valleys. The southern shoreline of Lake Lanier falls in the Piedmont province. This portion of the Piedmont is characterized by gentle topography ranging from rolling to steep hills (500 to 1500 ft MSL) and narrow valleys.

The LWRF lies in the Gainesville Ridges District of the Piedmont Province. The Gainesville Ridges strongly control the direction of flow of the Chattahoochee River (Hodler and Schretter 1986:17). The LWRF is situated on the banks of Lake Lanier, on what was formerly a small, unnamed tributary of the Chattahoochee River.

Geologically, Lake Lanier and the surrounding area is underlain by Precambrian and Paleozoic crystalline rocks (USGS 1995). According to the Geologic Map of Georgia, the southern shoreline of Lake Lanier, including the project area, is underlain by metagraywacke and mica schist. The northern shoreline is primarily underlain by intermediate gneiss consisting of biotic gneiss, mica schist, and amphibolite. The area contains inclusions of aluminous schists and quartzite.

4.3 Wetlands

Wetland communities are those communities that meet the soil, hydrology, and vegetation parameters described in the *1987 Federal Manual*. The Cowardin Classification System clarifies the types of wetland systems and describes them as forested, emergent, scrub-shrub, or open water systems.

In this region of Georgia, forested wetlands are dominated by hardwood deciduous tree species. Within the study area, dominant vegetation included red maple (*Acer rubrum*), tulip poplar (*Liriodendron tulipifera*), black willow (*Salix nigra*), box-elder (*Acer negundo*), roundleaf greenbrier (*Smilax rotundifolia*), giant cane (*Arundinaria gigantea*), and Chinese privet (*Ligustrum sinense*).

Field studies were initially conducted in 2007 to determine the presence of jurisdictional wetlands within the project area. An updated field survey was conducted in October 2012. There were no jurisdictional wetlands identified within the LWRF site or the proposed reclaimed water pipeline and diffuser location on either of the field visits.

4.4 Floodplain

The LWRF is located within the 100-year floodplain of Lake Lanier (**Figure 6,** Floodplain Map). One of the main purposes of Lake Lanier is flood control downstream of the lake, mainly protecting metro Atlanta. There have only been two major flooding events on the downstream section since the construction of Buford Dam. The most recent flooding event was in 2009. Floodplains will be involved in the implementation of this project.

4.5 Flora

Field surveys identified uplands communities proximate to the project area consisting of three types of habitat: developed and maintained ruderal, a littoral zone along the lake edge, and secondary-successional mixed hardwood and pine communities.

Ruderal communities are characterized by anthropogenic habitats that are currently altered by human manipulation, including mowed/maintained areas and utility rights-of-way. This community provides minimal habitat for wildlife diversity. At the LWRF site, there are two types of ruderal areas. One is used for recreation and access, the other is a graded slope located below the LWRF. Flora species in the recreation area include tall fescue (*Fescue* sp.), crabgrass (*Digitaria* sp.), planted ornamental oaks including red oak (*Quercus rubra*) and water oak (*Quercus nigra*), and American holly (*Ilex opaca*). Flora species found on the graded slope include broomsedge (*Andropogon virginicus*), blackberry (*Rubus* sp.), goldenrod (*Solidago* sp.), and dogfennel (*Eupatorium capillifolium*).

The littoral zone is located along the edge of Lake Lanier and is characterized by an adjacency to water and sloped elevations. This area at the LWRF site is approximately 20’ wide, subject to erosion, and has a rocky surface including boulders. Canopy species include American sycamore (*Platanus occidentalis*), black willow, tulip poplar, American sweetgum (*Liquidambar styraciflua*), and river birch (*Betula nigra*). This area also included invasive species such as kudzu (*Pueraria lobata*), Chinese privet, and lespedeza (*Lespedeza cuneata*).

Secondary successional mixed hardwood and pine communities are characterized by past land disturbance. Typically, these areas consist of mixed oaks and pines that have been logged, row cropped, terraced, or otherwise anthropogenically manipulated. The original community has been removed and several different communities may have established over time. A mixture of hardwood and pine species typically dominated these areas. Tree sizes vary due to differences in time since these communities were disturbed. Typical species include black oak (*Quercus veluntina*), red oak, white oak (*Quercus alba*), loblolly pine (*Pinus taeda*), red maple, tulip poplar, and sweetgum. This environment generally offers moderate habitat for wildlife diversity.

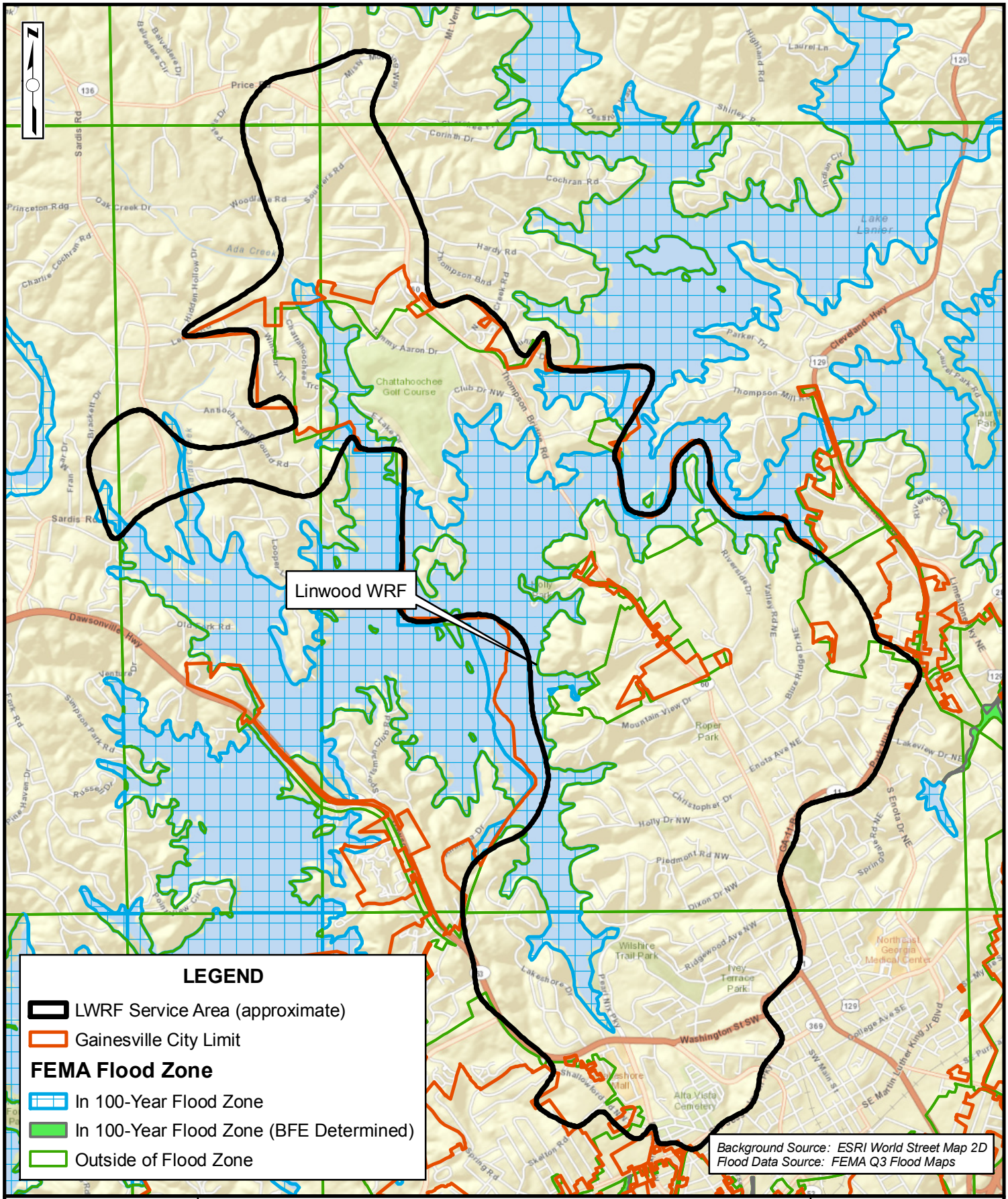

JJG	LINWOOD WATER RECLAMATION FACILITY RECLAIMED WATER PIPELINE AND DIFFUSER ENVIRONMENTAL ASSESSMENT	Date: December 2012 Scale: 1" = 4,000' Project: JJ205139
	FLOODPLAIN MAP	Figure 6

4.6 Fauna

Field surveys identified the ruderal, littoral, and fragmented secondary-successional forested areas adjacent to the project area and provide minimal to moderate habitat for wildlife diversity. Typically, animals that adapt well to urbanization occupy these areas. Mammals known to utilize this habitat include the white-tailed deer (*Odocoileus virginianus*), raccoon (*Procyon lotor*), Virginia opossum (*Didelphis virginiana*), and Eastern gray squirrel (*Sciurus carolinensis*). Bird species utilizing this habitat are typically those known to occupy developed areas such as the American robin (*Turdus migratorius*), Northern mockingbird (*Mimus polyglottos*), Northern cardinal (*Cardinalis cardinalis*), American crow (*Corvus brachyrhynchos*), and blue jay (*Cyanocitta cristata*). In addition, desktop reviews identified one federal-listed and eleven state-listed protected species listed for Hall County. These species are discussed in more detail under the Endangered and Threatened Species section.

Lake Lanier feeds the Chattahoochee River downstream of Buford Dam. This reach of the Chattahoochee is designated as a Secondary Trout Stream. There are no primary trout streams within the project area. There is no Essential Fish Habitat located within Lake Lanier.

Lake Lanier supports a relatively diverse community of both game and non-game fishes currently represented by 34 species. Species represented in Lake Lanier are common, widespread, and typical of many southern warm-water impoundment fishery assemblages. Fish populations have been monitored since 1957 by the Georgia Department of Natural Resources (GADNR) Wildlife Resources Division. In 1982, a statewide standardized annual reservoir sampling protocol was implemented by the GADNR to assess reservoir fish communities and to base management decisions on these assessments. Sampling protocols consist of seining, boat electrofishing, gill netting, and periodic cove rotenone (fish toxicants). Additionally, creel surveys are conducted every five years to supplement fishery community assessments.

Principal species identified by the GADNR in Lake Lanier consist of spotted bass (*Micropterus punctulatus)*, striped bass (*Morone saxatilis*), black crappie (*Pomoxis nigromaculatus*), blueback herring (*Alosa aestivalis*), and threadfin shad (*Dorosoma petenense*) (Weaver 2005). Based on GADNR Lake Lanier fish community surveys conducted November 10-22, 2000, relative abundance (catch per unit effort) of fishes was dominated by gizzard shad (*Dorosoma cepedianum*), striped bass, and black crappie; biomass was dominated by longnose gar (*Lepisosteus osseus*), striped bass, and gizzard shad (Weaver 2005).

Species historically stocked by GADNR in Lake Lanier consist of white bass (*Morone chrysops*), rainbow trout (*Oncorhynchus mykiss*), brook trout (*Salvelinus fontinalis*), brown trout (*Salmo trutta*), and threadfin shad. Currently, supplemental stockings of walleye (*Stizostedion vitreum*) and striped bass are conducted on an annual basis. Forage fish populations in Lake Lanier have been historically dominated by threadfin shad and gizzard shad; however, blueback herring have become well established in recent years. The sport fishery is comprised primarily of spotted bass, largemouth bass (*Micropterus salmoides*), striped bass, and black crappie. Bluegill (*Lepomis macrochirus*) and channel catfish (*Ictalavras punctatus*) are abundant in the reservoir but do not significantly contribute to the sport fishery (Weaver 2005).

These species feed on a variety of food items ranging from fish, amphibians and reptiles, to aquatic insects and other macroinvertebrates. Habitats that support food webs for both game and non-game fish species occur throughout much of the lake and are not unique to any particular area of the lake. Species represented in the Lake Lanier fishery are primarily the results of anthropogenic activities and illustrate common and widespread fish communities found in many southern warm water lakes.

4.7 Endangered and Threatened Species

Under terms of Section 7 of the Endangered Species Act, federal agencies shall "*ensure that any action authorized, funded, or carried out by such agency is not likely to jeopardize the continued existence of any endangered species or result in the destruction or adverse modification of habitat of such species which is determined by the Secretary to be critical…*" The USACE requires protected species surveys for project sites that involve a Section 404 of the Clean Water Act permit.

Prior to the field studies, an office review of available resources was performed to develop a list of potential federal and state listed species for Hall County. The tentative list of known protected species was compiled by review of the federal "Redbook" – Region 4, a copy of the United States Fish and Wildlife Service (USFWS) county database (updated May 2004), USFWS website http://www.fws.gov/athens/endangered/counties, *Protected Animals of Georgia* (GDNR 1999), *Protected Plants of Georgia* (Patrick *et al.* 1995), and review of element occurrence records on the Georgia Natural Heritage Program's (GNHP) web site - http://www.dnr.state.ga.us/dnr/wild/. The office review generated information for use by field personnel to readily evaluate habitats proximate to the project corridor that may support the occurrence of protected species.

Field surveys for protected species were conducted based on the identification of preferred/suitable habitat for species known to occur in Hall County. Refer to **Table 3** for a summary of protected species known to occur in Hall County.

Table 3
Summary of Protected Species Known to Occur in Hall County

Species	Common Name	Federal Rank	State Rank	Preferred Habitat
Faunal				
Haliaeetus leucocephalus	Bald eagle	DL	T	edges of lakes and large rivers; seacoasts
Cyprinella callitaenia	Bluestripe shiner	N/A	*R*	Usually inhabit mainstem reaches of rivers and large streams in riffles and runs with rubble or sand substrate and are most often collected in areas with swift current velocities. It has also been found in the lower reaches of several small impounded tributaries to the Chattahoochee River, where the backwaters of the reservoir apparently mimic large stream habitat
Cyprinella xaenura	Altamaha shiner	N/A	*T*	Inhabit small tributaries and rivers. They are most often found in small pools with rocky to sandy substrates
Cambarus howardi	Chattahoochee crayfish	N/A	*T*	Found in clear, free-flowing waters, often in riffle habitat. It has been collected in a range of stream sizes, from smaller tributary streams to the mainstem Chattahoochee River.
Floral				

Cypripedium acaul	Pink lady's slipper	N/A	U	Upland pine and mixed pine-hardwood forests with acidic soils; in the maintains, near the edges of rhododendron thickets and mountain bogs
ypripedium parviflorum	Yellow lady's slipper	N/A	R	Mesic to dry deciduous woodlands, sandy woodlands and savannas, thinly wooded bluffs along rivers, and shady areas of bogs
Hydrastis canadensi	Golden seal	N/A	E	Moist, deciduous hardwood forests with neutral or basic soil over bedrock that is high in calcum or magnesium
Monotropis odorata	Sweet pinesap	N/A	T	Mixed pine-hardwood or chestnut oak-dominated forests with dry, acidic soil, often with mountain laurel, rhododendron, and blueberry
Nestronia umbellula	Indian olive	N/A	R	Dry, open, upland woods with mixed hardwood-pine canopy
Symphyotrichum georgianum	Georgia aster	C	T	Edges and openings in rocky, upland oak-hickory-pine forests, and rights-of-way through these habitats. Usually with circumneutral soils
Veratrum woodii	Ozark bunchflower	N/A	R	Lower slopes and stream terraces in moist, hardwood forests in northeast Georgia
Isoetes melanospora	Black-spored quillwort	E	E	Shallow, temporarily flooded, flat-bottomed pools formed by neutral erosion on granite outcrops, The pools are seasonally inundated by winter and early spring rains and by seepage from surrounding habitats; they are usually completely dry during the summer and fall.

E: Endangered; T: Threatened; DL: Delisted; R: Rare; U: Unsusual; C: Candidate; N/A: Not Applicable

The following species have been identified by the United States Fish and Wildlife Service (USFWS) and/or the GADNR as being present in Hall County, Georgia.

Bald Eagle (*Haliaeetus leucocephalus* – state threatened) – The USFWS removed the bald eagle as threatened under the Endangered Species Act (ESA) on August 8, 2007, and published in May 2007, National Bald Eagle Management Guidelines (Eagle Guidelines) to assist the

public in understanding protections afforded to any prohibitions related to the bald eagle under the Bald and Golden Eagle Protection Act (16 U.S.C. 668-668d) (Eagle Act), the Migratory Bird Treaty Act (16 U.S.C. 703-712), and the Lacey Act (16 U.S.C. 3371-3378). The Eagle Act prohibits anyone, without a permit issued by the Secretary of the Interior, from "taking" bald eagles, including their parts, nests, or eggs. The Eagle Act defines "take" as "pursue, shoot, shoot at, poison, wound, kill, capture, trap, collect, molest or disturb."

In Georgia, the bald eagle finds habitat along inland waterways and estuarine areas, selecting areas with low human disturbance, suitable forest structure, and abundant prey. The bald eagle typically nests in the largest tree in its chosen territory. Nest sites along rivers are typically close to the shores with large aquatic areas and little forest edge. Lake nest sites are usually near water, with large individual trees, and little overall human disturbance. This species prefers nest sites within 0.5 miles of water and a clear path to that water. The bald eagle usually forests within approximately 1.90 miles of its nest site during breeding season.

The proposed project area provides potential foraging habitat, however; the level of development and human presence proximate to the proposed project area would make it highly unlikely that bald eagles utilize the proposed project area. The proposed project would not "take" bald eagles, as defined by the Bald and Golden Eagle Protection Act.

Bluestripe shiner (*Cyprinella callitaenia* – state rare) – The bluestripe shiner is a small fish that requires flowing water with sand of mud substrate. This species is endemic to the Chattahoochee River but cannot tolerate impoundment conditions. As a result, no habitat for bluestripe shiner exists within the proposed project area.

Altamaha shiner (*Cyprinella xaenura* – state threatened) – The Altamaha shiner is a robust minnow that inhabits small tributaries and rivers, most often found in small pools with rocky to sandy substrates. The Altamaha shiner has neither been identified in the Upper Chattahoochee watershed, nor could it tolerate impoundment conditions. As a result, no habitat for Altamaha shiner exits within the proposed area.

Chattahoochee crayfish (*Cambarus howardi* – state threatened) – The Chattahoochee crayfish is a multi-colored crayfish found in clear, free-flowing waters, often in riffle habitat. It has been collected in a range of stream sizes, from smaller tributary streams to the mainstem of the Chattahoochee River. Much of the suitable habitat within the range of the Chattahoochee crayfish has been inundated by Lake Lanier and other, smaller impoundments. As a result, no habitat for Chattahoochee crayfish exists within the proposed project area.

Pink lady's slipper (*Cypripedium acaule* – state unusual) – The pink lady's slipper is a perennial herb with two large basal leaves and a single flower stalk topped with a showy pink flower. The habitat for this species is upland pine and mixed pine-hardwood forests with acidic soils. Wooded areas adjacent to the LWRF qualify as habitat for this species. However, no specimens of pink lady's slipper were observed during field studies.

Yellow lady's slipper (*Cypripedium parviflorum* – state rare) – The yellow lady's slipper is a perennial herb with 3-5 evenly spaced leaves with 1-2 yellow flowers. The habitat for yellow

lady's slipper occurs in rich, cover hardwood forests. As a result, no habitat for yellow lady's slipper exists within the proposed project area.

Golden seal (*Hydrastis canadensis* – state endangered) – Golden seal is a perennial herb that attains a height of 8 to 16 inches. Its habitat consists of rich woods and mountain cover forests. This habitat type does not occur within the proposed project area. As a result, no potential habitat for the golden seal was identified during field studies.

Sweet pinesap (*Monotropis odorata* – state threatened) – Sweet pinesap is a perennial saprophytic plant that grows to approximately 2.5 inches tall. The plant produces sessile bract-like leaves. Sweet pinesap is found in pine dominated forests and pine-oak heaths. As a result, no potential habitat for sweet pinesap was observed during field studies.

Indian olive (*Nestronia umbellula* – state rare) – Indian olive is a deciduous shrub attaining a height of 1.5 to 4 feet. Its preferred habitat consists of dry, open, upland forests with a mixture of pine and hardwoods. Wooded areas adjacent to the LWRF qualify as a habitat for this species. However, no specimens of Indian olive were observed during field studies.

Georgia aster (*Symphyotrichum georgianum* – federal candidate, state threatened) – Georgia aster is a perennial herb arising from an underground rhizome. It may have one to two stems with thick clasping, leave that are rough to the touch. The ray flowers are dark purple and the disk flowers are white with purplish tips and purple anthers. The Georgia aster inhabits dry open areas, typically woodland borders that have management practices mimicking natural disturbance, such as road and utility right-of-way. No potential habitat for the Georgia aster was identified during field studies.

Ozark bunchflower (*Veratrum woodii* – state rare) – Ozark bunchflower is a perennial herb from a deeply buried bulb. Basal leaves measure 8-24 inches long and 1-4 inches wide. The flowering stem can grow up to 6.5 feet tall with many slender, flowering branches. The flowers measure 0.75 inches wide with 6 maroon tepals. The habitat for this species includes lower slopes and steam terraces in moist, hardwood forests, usually over basic soils. Soils on site are highly acidic; therefore no potential habitat for the Ozark bunchflower was identified during field studies.

Black-spored quillwort (*Isoetes melanospora* - federal and state endangered*)* – Black-spored quillwort is a perennial herb with a bulb-like base and forking roots. The habitat for this species includes shallow, temporarily flooded flat-bottomed pools formed by natural erosion on granite outcrops. The pools are seasonally inundated by winter and early spring rains and by seepage from surrounding habitats; they are usually completely dry during the summer and fall. There are no granite outcrops at the LWRF; therefore no potential habitat for the black-spored quillwort was identified on site.

4.8 Cultural Resources

According to Section 106 of the National Historic Preservation Act, all agencies or entities funded, regulated, or licensed by federal agencies, must "take into account" any significant cultural resources that may be adversely affected by the proposed undertaking.

Prior to the cultural resource surveys being conducted, the records at the State Archaeological Site Files at the University of Georgia were examined to locate known sites and to develop a general prehistoric and historic context. Site File topographic maps of the project area were examined. In addition, previous archaeological reports detailing survey and testing in the area were consulted for relevant information regarding site types and their distributions.

An Environmental Information Document (EID) was prepared for the project in December 2001 as required by the State of Georgia for the construction, upgrading, or expansion of any publicly-owned wastewater treatment facility. The EID was also prepared to support the City's application for a State Revolving Fund Loan for the construction of the LWRF plant expansion. Based on a review of the project by the State Clearinghouse, there are no known impacts to archaeological resources.

Historic Resources

A review of the online database, National Register of Historic Places (formerly The National Register Information System) (National Park Service 2012) in 2007 and more recently in November 2012 determined that 22 historic sites are located in Hall County. None of the known sites are located within the project area. No historic resources are located in the project area. No standing structures over 50 years old were observed within the project area.

Archeological Resources

An archaeological survey of the LWRF site conducted in 2001 for the State Revolving Fund found that the site exhibited characteristics of a previously disturbed area, including graded roads, a culvert, past farming activities, and a transmission line. One prehistoric archaeological site (9HL456) was identified during field surveys. The site consists of a prehistoric lithic (quartz) scatter that occupies a narrow ridge crest in the southeast quadrant of the survey tract, partially within a transmission line right-of-way. Lithic debris was found in a dirt road that traces the ridge crest. The rest of the site is forested. Two (2) surface collections were made and sixteen (16) shovel tests were excavated. Soils are eroded and the artifacts from five positive shovel tests came from the plowzone (6 to 9 inches below the surface).

No temporally diagnostic artifacts were recovered, but the site probably dates to the Middle Archaic period, which is frequently encountered in the Lake Lanier area (Rudolph 1980). The bulk of the collection consists of small tertiary flakes, which are the by-product of the final stages of stone tool manufacture or tool resharpening. Given the linear nature of the site, it is likely that the artifact assemblage resulted from several short-term visits by prehistoric groups.

Site 9HL456 is recommended ineligible for listing in the NHRP due to poor integrity as a result of plowing and erosion. The 2001 EID states that as a result of these previous disturbances, any archaeological resources that may have existed on the property are no longer believed to possess integrity sufficient to classify them as significant archaeological resources. Additional surveys of the LWRF site are unlikely to yield significant new information about the past.

4.9 Noise

Noise levels associated with a given environment are considered to be "ambient noise levels." Because the ambient noise level is unique to a location, it may vary from site to site based on the

location, surrounding environment, and approximate time that noise comparisons are made. Ambient noise is sometimes called the "background" noise level for a given location. It consists of the normal or existing level of environmental noise and is usually measured in decibels (dB).

A single noise measurement would not necessarily represent a noise level at a particular location. Noise is constantly fluctuating within a defined range. In order to bracket this range and provide a statistically meaningful measurement, noise is measured over a specified period of time. During this time frame, measurements are taken at consistent intervals.

The human hearing mechanism is a much better detector of relative differences in noise than absolute values of noise levels. Research indicates that for ordinary noise, the human ear can barely detect a 3 dBA reduction or increase in noise. A 10 dBA change is detected as an approximate halving or doubling of the sound level. **Table 4** illustrates the human response to relative changes in noise levels.

Table 4
Human Response to Changes in Noise Levels

Decibel Change (dBA)	Human Relative Response
-30	1/8th As Loud
-20	1/4th As Loud
-10	1/2 As Loud
-5	Readily Noticeable
-3	Barely Perceptible
0	Reference
3	Barely Perceptible
5	Readily Noticeable
10	Twice As Loud
20	Four Times As Loud
30	Eight Times As Loud

4.10 Air Quality

Metropolitan Atlanta's air quality is among the worst in the U.S. Hall County is one of the 24 counties in Georgia designated as air quality nonattainment areas that are in violation of the Clean Air Act standards for ground-level ozone (O_3) and particulate matter ($PM_{2.5}$). These areas are called nonattainment areas if they currently do not meet air quality standards or maintenance areas if they have previously violated air quality standards but currently meet them and have an approved maintenance plan. In addition to $PM_{2.5}$ assessments, Mobile Source Air Toxics (MSAT) assessments are required statewide for most federal projects. However, due to the nature of the proposed project, it would not be classified as a project with meaningful MSAT impact.

4.11 Water Quality

The CE-QUAL-W2 mathematical model was used to predict potential surface water quality and hydrologic changes to the lake resulting from the new outfall location. The model considers the impact of the change in outfall location under current conditions and under increased water withdrawal conditions projected by the MNGWPD (Jordan Jones & Goulding 2003) to occur by the year 2030. The model was also applied to evaluate water quality conditions at radically low water levels.

The CE-QUAL-W2 model framework was originally developed by the USACE and was applied to Lake Lanier in the 1990s by Limno-Tech, Inc. (LTI) for the Upper Chattahoochee River Basin Group. The model has since been used to evaluate the potential water quality impacts from existing and proposed point and nonpoint sources, such as the 40 MGD discharge into Lake Lanier from Gwinnett County's F. Wayne Hill Water Resources Center.

As shown in **Figure 7,** Lake Lanier CDE-QUAL Model Segments, the proposed outfall lies near the shore in Segment 6 of the CE-QUAL-W2 water quality model of Lake Lanier. Segment 6 lies in the portion of the lake between a line just downstream of Thompson Bridge and Lanier Bridge. Parameters and data for the baseline model scenario come from the data record for the existing LWRF discharge. The existing outfall extends from 290 to 370 feet offshore from the WRF. Depth at the diffuser ranges from 71 to 81 feet at a lake water surface elevation of 1071 ft MSL, with a typical current of 0.04 m/s. Hourly temperature and daily average concentrations of ammonia, carbonaceous biochemical oxygen demand (CBOD), soluble reactive phosphorus (SRP) and total phosphorus (TP) are available for the current outfall. The proposed easement for the new diffuser would be built about 400 feet to the north of the existing diffuser. The proposed diffuser will also be permitted for a maximum monthly average daily flow of 7.0 MGD.

The lake was modeled using meteorological conditions for the five-year period from 1984 to 1988. In a past study, this meteorological period is a good representation of drought conditions that the basin has experienced in the past decades. This period was found to be critical in terms of water quality impacts of a proposed discharge (LTI 2003) and appropriate for this model. Four scenarios were considered to support evaluation of water quality impacts:

- Baseline: Current conditions for land use, 1984-1988 meteorology, current water withdrawal rates, and existing discharges only, including the existing LWRF discharge at its current location (modeled with a constant 7.0 MGD flow and concentrations of 2.5 mg/L CBOD, 10 mg/L TSS, 0.5 mg/L NH3-N, and 0.13 mg/L TP).

- Scenario A ("Changed Location"): Same as Baseline scenario, but with the location of the LWRF discharge adjusted to match the proposed new location.

- Scenario B ("Changed Location with Increased Consumptive Use"): Same as scenario A, but with a simulated continuous withdrawal of 145 MGD from model Segment 5 (Lake Lanier upstream of Gainesville) to simulate predicted additional 2030 consumptive use in the Lake Lanier basin.

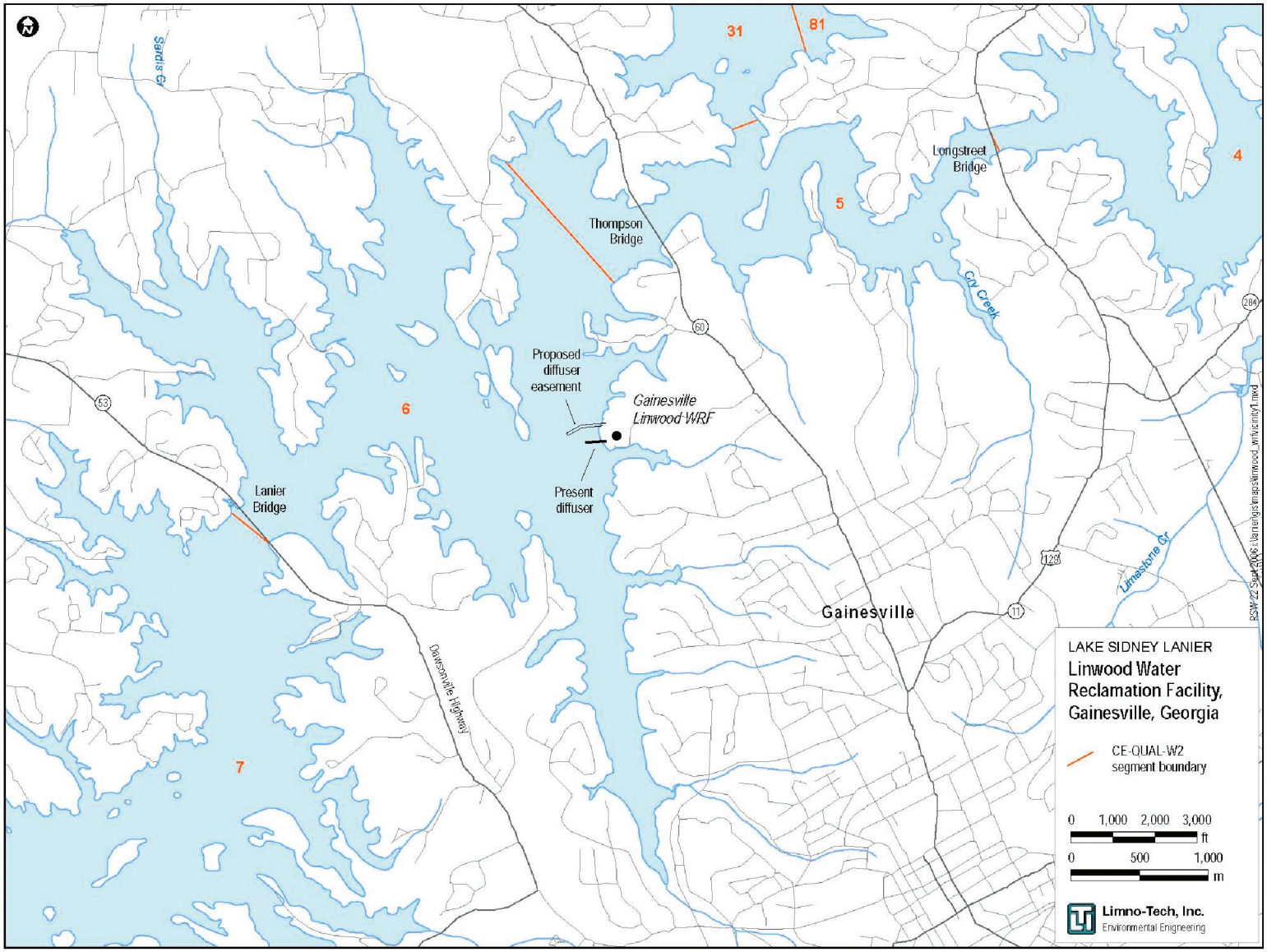

JORDAN JONES & GOULDING

Linwood Water Reclamation Facility Reclaimed Water Pipeline and Diffuser Environmental Assessment

Lake Lanier CE-QUAL Model Segments

Date:	April 2007
Scale:	N.T.S.
Job No.:	2051.239

Figure 7

2051_239_Figures.fh11

- Scenario C ("Minimum Lake Levels"): Same as scenario A with additional water withdrawals during year 4 of the simulation of about 340 MGD from model Segment 5 to bring the minimum simulated lake level down to a target of 1035 feet MSL (actual minimum 1034.9). This provides a representation of critical conditions corresponding to drought or other extremes that deplete the storage of water in the reservoir. This scenario is included at the request of USACE staff.

The Baseline scenario represents current permitted discharge conditions, while Scenario A represents the hypothetical future condition where the discharge has been moved to the proposed new location. Scenario B represents a "predicted future" development scenario, where increased withdrawals occur in the basin. Scenario C shows the new discharge location and hypothetical extreme water scarcity conditions. All scenarios were evaluated using updated operating rules for Buford Dam that corresponds to the Interim Operations Plan for Support of Endangered Species – Jim Woodruff Dam.

Surface Water Hydrology Modeling Results

Results from the model indicate no change in lake elevation attributable to the change in diffuser location. Elevations are predicted to be lower under scenarios with additional withdrawals of water, which are not related to the proposed change in diffuser location.

As seen in **Table 5**, there is no difference in the model-predicted mean and range of lake surface elevations between the Baseline scenario and Scenario A, which incorporates the proposed new discharge location. The mean lake level drops by 2.3 feet in Scenario B, which incorporates increased withdrawals from the Lake Lanier basin to match projected 2030 consumptive water use, and by 9.4 feet in Scenario C. The lower mean lake levels predicted in Scenarios B and C are not consequences of the proposed change in the LWRF discharge location.

Table 5
Mean (Range) of Modeled Lake Elevation under Different Scenarios

Scenario	Lake Elevation (feet MSL) **Mean** (Range)
Baseline	**1066.2** (1055.0 - 1075.2)
A	**1066.2** (1055.0 - 1075.2)
B	**1063.9** (1048.2 - 1074.9)
C	**1056.8** (1034.9 - 1074.9)

The minimum lake water levels, i.e., 1048.2 feet MSL and 1034.9 feet MSL, predicted respectively in Scenarios B and C, have not been observed in the historical record for the reservoir. The lowest May to October water level observed in Lake Lanier was 1,054.85 ft MSL

during 1986-1987. The lowest drought-incurred lake level, 1,050.79 ft MSL, was observed during the 2007 to 2009 drought. It is possible that the modeled levels have not been observed in the lake because the extreme water withdrawal situations in Scenarios B and C, coupled with the 1984 to 1988 drought condition in the model, have not occurred in history.

Overall, the LWRF discharge at the proposed location would help maintain flows into the lake. Any alternative outfall location outside of the lake such as a stream channel in the Linwood area would still drain to Lake Lanier but may impose abnormally high flows in the channel, causing erosion and other water quality problems.

4.12 Groundwater

Results from the model indicate no change in lake elevation attributable to the change in diffuser location. Elevations are predicted to be lower under scenarios with additional withdrawals of water, which are not related to the proposed change in diffuser location.

As seen in **Table 5**, there is no difference in the model-predicted mean and range of lake surface elevations between the Baseline scenario and Scenario A, which incorporates the proposed new discharge location. The mean lake level drops by 2.3 feet in Scenario B, which incorporates increased withdrawals from the Lake Lanier basin to match projected 2030 consumptive water use, and by 9.4 feet in Scenario C. The lower mean lake levels predicted in Scenarios B and C are not consequences of the proposed change in the LWRF discharge location.

The minimum lake water levels, i.e., 1048.2 feet MSL and 1034.9 feet MSL, predicted respectively in Scenarios B and C, have not been observed in the historical record for the reservoir. The lowest May to October water level observed in Lake Lanier was 1054.85 feet MSL during 1986-1987. The lowest drought-incurred lake level, 1050.79 feet MSL, was observed during the 2007 to 2009 drought. It is possible that the modeled levels have not been observed in the lake because the extreme water withdrawal situations in Scenarios B and C, coupled with the 1984 to 1988 drought condition in the model, have not occurred in history.

Overall, the LWRF discharge at the proposed location would have a positive impact on groundwater and would help maintain flows into the lake. Any alternative outfall location outside of the lake such as a stream channel in the Linwood area would still drain to Lake Lanier but may impose abnormally high flows in the channel, causing erosion and other water quality problems.

4.13 Recreation

The USACE maintains lake navigation charts, recreational areas mps, and attractor maps that may be downloaded from the Lake Lanier website (http://www.sam.usace.army.mil/Missions/CivilWorks/Recreation/LakeSidneyLanier/MapRoom). The lake supports 10 marinas with the Gainesville Marina being the only marina that serves the northern portion of the lake. A boat ramp that provides public access to the lake is located at Holly Park, approximately 4200 feet north of the project area. The parkland is separated from the location of the LWRF by a cove on Lake Lanier. Refer to **Figure 8,** Locations of Recreational Areas in the Vicinity of the Project Area.

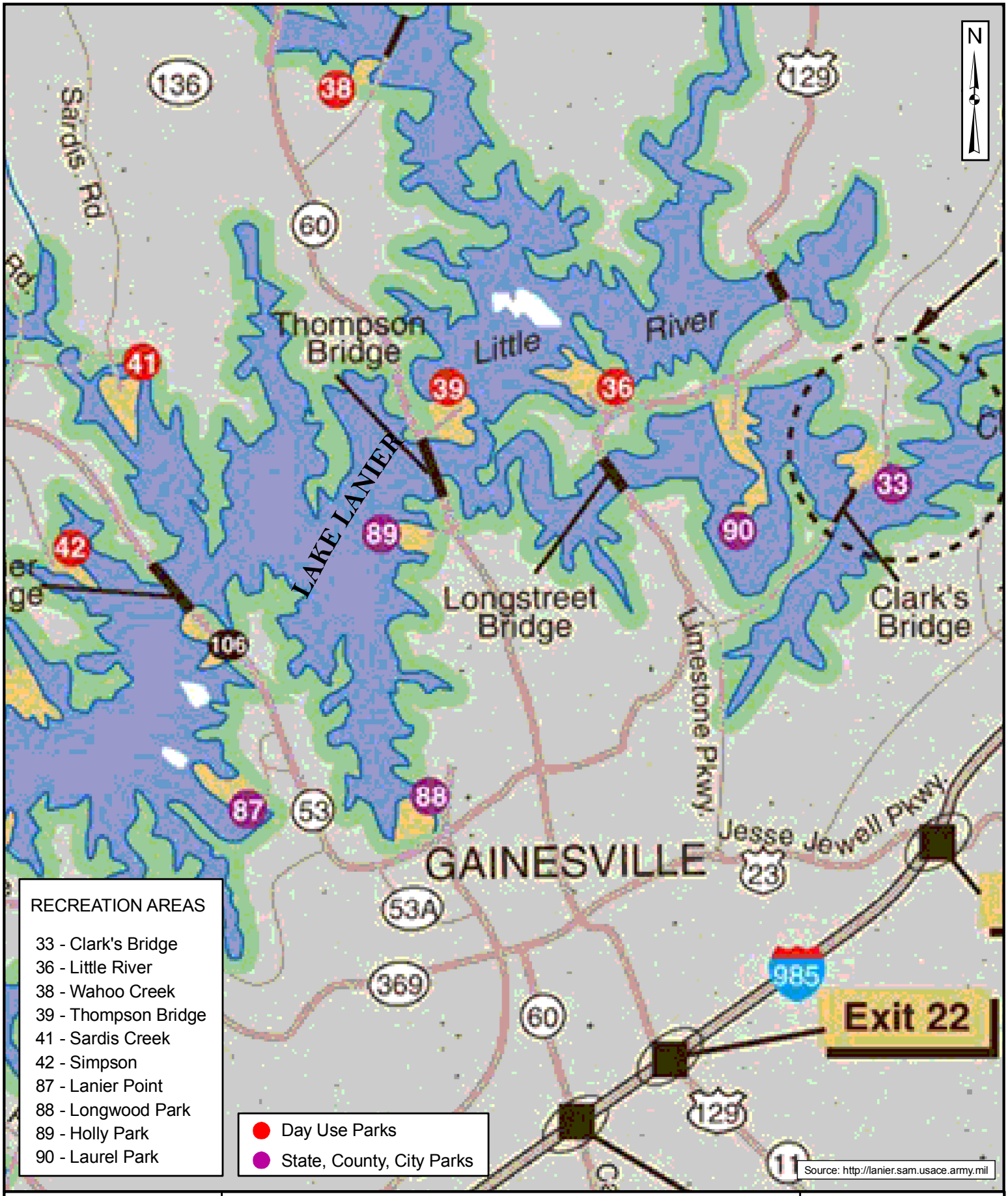

JORDAN JONES & GOULDING

Linwood WRF Environmental Assessment
Gainesville, Hall County, Georgia

Lake Lanier Recreation Areas

Date:	March 2007
Scale:	Not To Scale
Proj. No.:	02051239

Figure 8

Lake Lanier offers a tourism and recreational destination that enhances the local economy. The USACE operates 46 park areas around the Lake, providing picnic areas, campgrounds, boat launching ramps, swimming areas, group picnic shelters, and hiking trails. Additional areas have been leased from the USACE and are operated as city and county parks and marinas.

As one of the City and County's most important natural resources, sustained protection is needed for Lake Lanier in order to protect the quality of the water environment, to maintain its contribution to a healthy ecosystem, and to preserve its value to the community. The 2025 Gainesville and Hall County Comprehensive Plan (adopted June 2004; amended May 2005) identified no additional special needs for the Lake in excess of the federal and state mandated regulations. Implementation of the proposed project may have a temporary impact on recreation during construction.

4.14 Hazardous and Toxic Materials/Wastes

An inventory of potential hazardous or residual waste sites, including underground storage tanks (USTs), was completed in the project study area. This preliminary inventory consisted of a search of the EPA Standards and Practices for All Appropriate Inquiries (40 CFR Part 312) and the American Society for Testing and Materials Standards (ASTM) Standard Practice for Environmental Site Assessments (E 1527-05) by Environmental Data Resources, Inc. (EDR) and a windshield survey of the study area in order to identify potential waste sites based on type of facility or obvious signs of potential environmental contamination that may be visible (stained soils, chemical odors, drums, etc.). Intrusive site investigation, such as soil or groundwater sampling was not conducted as part of this assessment.

The LWRF was identified on the UST, LUST, and Facility Index System/Facility Identification Initiative Program Summary Report (FINDS) databases. The FINDS database contains information on NPDES permit holding facilities. The subject property is noted as having underground storage tanks containing diesel fuel including one leaking underground storage tank (LUST). The LUST has been removed following regulatory requirements and has received "No Further Action" (NFA) status from the EPD. The database search did not identify any other UST or hazardous materials sites within a one-mile radius of the subject property.

Field investigations were conducted to verify the presence of potential UST and hazardous materials sites or other potentially hazardous conditions of concern. The surrounding properties identified are located approximately 0.75 mile to 1.0 mile from the subject property. Sites identified are listed in **Table 6**.

Table 6
UST/Haz Mat Sites Identified in the Project Area

Map Indicator	**Site Name**	**Site Type**	**Site Location**
1	LWRF	UST	500 Linwood Dr.
2	Diamond Auto Spa & Lube	Haz Mat	Southeast corner of SR 60 & Linwood Dr. intersection
3	Shell gas station	UST	Southeast of SR 60 & Linwood Dr. intersection
4	Chevron gas station	UST	Northeast of SR 60 & Linwood Dr. intersection
5	3D Cleaners	Haz Mat	Southwest of SR 60 & Linwood Dr. intersection

Source: JJG EID

5.0 ENVIRONMENTAL IMPACTS OF THE RECOMMENDED PLAN

Section 5.0, Environmental Impacts of the Recommended Plan, will cover the impacts the proposed project may have on environmental conditions currently within the project area including: General Environmental Setting, Soils, Wetlands, Floodplain, Flora, Fauna, Endangered and Threatened Species, Cultural Resources, Noise, Air Quality, Water Quality, Groundwater, Recreation, and Hazardous and Toxic Materials/Wastes.

5.1 General Environmental Stetting

According to current the land use map (**Figure 5**) for the project area, the proposed area of disturbance is classified as Utilities. The Proposed Action will not change the current land use. The portion of the pipeline that will cross USACE lands will be covered after construction, with a permanent easement granted to the City for maintenance of the pipeline. The new diffuser is simply replacing an inefficient diffuser that has been in place for more than 50 years. Placement of the new pipeline across the site and the new diffuser below the surface of the lake would not change any current land uses surrounding the project site. Therefore, land use in the project area would not be directly impacted by the placement of the new diffuser or the discharge of reclaimed water to the lake.

5.2 Soils

Open cut installation of the proposed pipeline and diffuser would require the use of earth moving equipment. Soil within the footprint of the proposed pipeline and diffuser would be impacted through relocation or removal. These impacts would be mitigated through strict implementation of BMPs related to sediment and erosion control. However, there would be no long term impacts to the core soil characteristics or soil makeup within the study area. Therefore, soils would not be impacted due to the proposed project.

Prime or Unique Farmland

A study of the project found that the soil in the area is Pacolet sandy loam. According to the US Department of Agriculture (USDA) Natural Resource Conservation Service (NRCS), this soil classification is not prime farmland or farmland of statewide importance. Therefore, no areas of prime farmland are located within the project area. Thus, there is no involvement with farmland resources protected by the National Farmland Protection Policy Act.

Geology

The Proposed Action will not significantly impact major geological formations. Construction of the project would require excavation of earth and rock below the 1073-foot contour line of Lake Lanier. The pipe will be laid on the bottom of the lake bed at elevations below 1050 MSL. Between elevations 1050 and 1071 MSL, the pipe will be installed by open cut methods with a depth of cover of 2 feet. At elevations of 1071 and higher, the pipe will be installed by open cut methods with a depth of cover of 5 feet. Strata studies indicated that rock should not be present within the open-cut area; however, should rock be encountered blasting may be required. No significant impacts to geology would result from implementation of the proposed project.

5.3 Wetlands

Field studies were conducted in 2007 and 2012 to determine the presence of jurisdictional wetlands within the project area. There were no jurisdictional wetlands identified within the LWRF site or the proposed reclaimed water pipeline and diffuser location during either field visit. Therefore, the proposed project will not impact wetland resources.

5.4 Floodplain

The proposed project would not represent a significant risk to life or property; it would not have a significant impact on natural and beneficial floodplain values; it would not support incompatible floodplain development. No direct adverse impacts to the floodplain are anticipated as a result of project implementation.

5.5 Flora

Direct impacts to flora due to the proposed project will mainly be temporary during construction and possibly maintenance activities and are not likely to cause permanent changes in vegetation habitat. Moreover, there are no suitable (i.e. not impacted by development) habitats for federal and state listed endangered/threatened species. Therefore, any impacts to the flora in the area would be minor.

5.6 Fauna

As previously stated, the ruderal and fragmented secondary-successional forested areas adjacent to the project area provide minimal to moderate habitat for wildlife diversity. Typically, animals that adapt well to urbanization occupy these areas. No critical habitat has been identified within the project area as assigned by Section 4 of the Endangered Species Act.

Any impacts to wildlife resources that will occur directly as a result of the proposed project are only temporary during construction and possibly maintenance activities, and are not likely to cause permanent changes in wildlife habitat. Moreover, there are no suitable (i.e. not impacted by development) habitats for federal and state listed endangered/threatened species. Therefore, the proposed project is not likely to have any impacts to wildlife resources.

Lake Lanier feeds the Chattahoochee River downstream of Buford Dam. This reach of the Chattahoochee is designated a Secondary Trout Stream. There are no primary trout streams within the project area. There is no Essential Fish Habitat located within Lake Lanier. Therefore, discharge of the reclaimed water to Lake Lanier will have no impact the aquatic communities.

Fishery Resources

Lake Lanier supports a relatively diverse community of both game and non-game fishes currently represented by thirty-four species. Species represented in Lake Lanier are common, widespread and typical of many southern warm-water impoundment fishery assemblages. Fish populations have been monitored since 1957 by the GDNR Wildlife Resources Division.

There is no Essential Fish Habitat located within Lake Lanier. Reproduction for most warm water game fish occur in very shallow water along the shoreline, unlike the proposed location of the diffuser which is too deep for suitable spawning habitat. No impacts to fishery resources are anticipated as a result of the proposed project.

5.7 Endangered and Threatened Species

Review of existing literature and available databases determined that one federal-listed, one federal-candidate species and twelve state-listed species are known from Hall County, Georgia. No suitable habitats or species were identified during the field surveys. The exception was habitat for the bald eagle (recently relisted as state endangered) was identified. However, due to the high level of development and human activities, it is unlikely that the specie will utilize the proposed project area. The proposed project would not result in a "take" of the bald eagle, as defined by the Bald and Golden Eagle Protection Act. Therefore, no reasonably foreseeable impacts to Endangered, threatened or other listed species are anticipated by the proposed project.

5.8 Cultural Resources

Historic Resources
Placement of the new pipeline across conservation lands and the new diffuser into the lake will not directly impact any historic resources as none are located in the project area.

Archaeological Resources
The single prehistoric archaeological site (9HL456) that was identified in the southeastern section of the LWRF site is considered ineligible for the NRHP due to poor integrity as a result of plowing and erosion. Further, this site is not in the vicinity of the proposed diffuser or pipeline; therefore, there will be no direct impacts to archaeological resources.

5.9 Noise

During the construction, noise will be generated by various work vehicles and other heavy equipment that will be utilized to transport materials and excavate for the installation of the pipeline. Noise levels will range from 94 – 98 dBA-Leq at 25 feet and from 88 – 92 dBA-Laq at 50 feet.

Construction noise associated with the installation of the pipeline will be temporary and minor due to project design. Reclaimed water that is released through the proposed diffuser on the lake bottom will not generate noise. Further, there are no sensitive receptors should any incidental noise be generated.

5.10 Air Quality

The proposed project would produce a minimal impact on the existing air quality near the LWRF. The construction phase of the project would cause a minimal discharge of atmospheric contaminants into the surrounding air through the emissions of construction vehicles and equipment. The new pipeline and diffuser would cause no additional discharge of atmospheric contaminants during standard operations, because discharge would occur subsurface and would not interact with the atmosphere. Air quality associated with construction impacts will be temporary. Therefore, the Proposed Action will cause minor effects to air quality.

5.11 Water Quality

The following water quality standards for Lake Lanier have been set by the EPD to provide recreational use [EPD 2011]:

- Chlorophyll-*a*: < 10 ug/L at Lanier Bridge (corresponds to Segment 6 of model), < 5 ug/L in upstream of Buford Dam (corresponds to Segment 19 of model);
- Nitrogen: < 4 mg/L in the photic zone;
- Dissolved oxygen: > 5 mg/L daily average, cannot be < 4 mg/L at any time; and
- Temperature: not to exceed 90 degrees F.

The EPD has set a phosphorus load limit not to exceed 0.25 lbs/acre-foot per year.

The same scenarios used to evaluate hydrologic changes to Lake Lanier resulting from the proposed discharge at the LWRF were also applied to water quality. Water quality modeling results are shown for model Segments 6 and 19 and the whole lake for all scenarios. Segment 6 is the segment where the new discharge will occur and where the greatest impact, if any, should be predicted by the model. Segment 6 also includes the Lanier Bridge location referenced in the current Lake Lanier water quality standards. Segment 19 of the model is the segment directly upstream of Buford Dam and is therefore also important for evaluating compliance with water quality standards.

Temperature

Temperature is a constituent of interest in the modeling of the proposed LWRF discharge to Lake Lanier. The large scale of the CE-QUAL-W2 model is not appropriate to evaluate near field impacts of the new reclaimed water pipeline. In a separate study (Jordan Jones & Goulding 2004), the mixing zone model CORMIX2 was used to design a multi-port diffuser for the new outfall. The design parameters called for the resulting diffuser to meet the following temperature goal:

> "At a sampling point 3 meters from the outfall diffuser, the temperature shall not exceed 90 degrees Fahrenheit nor increase the lake ambient temperature more than 5 degrees Fahrenheit."

The recommended forty-port fanned design configuration showed a maximum increase of 3.47 degrees Fahrenheit at the regulatory critical distance of 3 meters from the port, and a maximum temperature of 49.87 degrees Fahrenheit. This is well within the requirements of the stated temperature goal. Therefore, the Proposed Action will not have any direct effects to temperature. See Section 3 of this report for a detailed discussion of the diffuser design.

Point Source Loads of Nutrients

The model results in **Table 7** indicate no change between the Baseline Scenario and Scenario A and compliance with the EPD water quality standard for chlorophyll-*a* in Segment 6 under all scenarios. The water quality standard is exceeded in Segment 19 for Scenarios B and C, but this occurs only with the inclusion of simulated additional withdrawals that are not related to the proposed change in diffuser location.

Table 7
Mean and Range of Simulated Summer Photic Zone Chlorophyll-*a*
in Lake Lanier

	Segment 6	**Segment 19**	**Whole Lake**
Baseline	**5.3** **(3.8 – 6.7)**	**4.5** **(4.1 – 4.7)**	**5.4** **(3.0 – 19.0)**
A	5.3 (3.8 – 6.7)	4.5 (4.1 – 4.7)	5.4 (3.0 – 19.0)
B	5.4 (3.9 – 6.6)	4.7 (4.3 – 5.1)	5.5 (3.0 – 22.0)
C	5.9 (4.5 – 6.8)	5.2 (4.3 – 6.3)	5.5 (3.2 – 19.5)

Since the EPD water quality standard for total phosphorus (TP) is expressed in terms of a load limit, direct comparisons were not made.

Table 8
Simulated Photic Zone TN and Surficial DO in Lake Lanier

	Segment 6 (Lanier Bridge)			**Segment 19 (Lanier Bridge)**			**Whole Lake**
	TN	DO	EPD		DO		DO
Baseline	2.34	1.33	4.17		0.90		1.32
A	2.34	1.33	4.17		0.90		1.32
B	2.38	1.32	4.18		0.90		1.31
C	3.01	1.42	4.15		1.00		1.33

Total nitrogen (TN) and dissolved oxygen (DO) were also modeled to aid in evaluating potential water quality impacts to Lake Lanier from the new LWRF discharge location (**Table 8**). For all scenarios, simulated concentrations in Segments 6 and 19 of both constituents comply with the water quality standards set by the EPD. Total nitrogen mean and maximum results are similar for most scenarios. However, under drought conditions (Scenario C), both the mean and maximum TN reach the highest levels among the scenarios. Likewise, the minimum DO levels modeled are similar among the four scenarios, but the lowest value is seen under Scenario C.

In summary, the proposed change in discharge location (Scenario A) will not result in violations of EPD water quality standards for Lake Lanier chlorophyll-*a*, TN, and DO. Water quality standards are still met for TN and for DO even when Lake Lanier basin water withdrawals are increased to projected 2030 levels (Scenario B), and during simulated conditions of extreme water scarcity (Scenario C). Exceedances of chlorophyll-*a* standards are seen in Scenarios B and C, but these scenarios include changes in water use and availability that are not related to the proposed change in discharge location. Also, the modeled water scarcity conditions in Scenario C call for a water level approximately 20 feet lower than has ever been observed in Lake Lanier's 50-year history, so this scenario represents a hypothetical extraordinary occurrence.

Non-Point Source Loads of Nutrients

The proposed change in location of the discharge from the LWRF will not result in any changes to non-point source loads of nutrients to Lake Lanier and is therefore expected to have no impacts compared to current conditions.

Summary of Impacts to Water Quality and Hydrology

Lake Lanier was modeled using CE-QUAL-W2 to simulate extreme climatological conditions, proposed change in the location of the permitted diffuser in Lake Lanier, and an increase of in-lake water withdrawals to match EPD forecasts for the year 2030. It is believed that calculated lake levels and releases are consistent with both USACE model predictions and management goals, but there has been no formal USACE review or approval to date.

Hydrologic modeling showed that the proposed change in the location of the Linwood diffuser would not affect lake levels. Simulated lake levels were lower in scenarios where projected 2030 withdrawals and drought conditions were considered, but these conditions are not related to construction of the proposed diffuser.

Water quality model results show that chlorophyll-*a*, TN and DO levels in Lake Sidney Lanier are not affected by the proposed change in diffuser location and that they continue to comply with EPD standards. The absence of any differences in model results between scenario A and the Baseline scenario is expected since CE-QUAL-W2's segment structure makes it insensitive to fine-scale changes in the location of the diffuser.

When lake levels are lowered by simulation of projected 2030 consumptive use of water and of extreme water scarcity, TN and DO levels remain in compliance, while chlorophyll-*a* exceedances do occur. However, these conditions are not related to the proposed change in location for the diffuser.

Temperature exceedances are predicted not to occur with the construction of the new reclaimed water pipeline, as the diffuser design was carefully evaluated with CORMIX 2 to meet temperature design goals set by the City.

If the proposed project is constructed as planned, model results indicate that the new diffuser has little potential to negatively impact the water quality or water quantity in Lake Lanier.

5.12 Groundwater

As previously stated, results from the water quality model indicate no change in lake elevation attributable to the change in diffuser location. Elevations are predicted to be lower under scenarios with additional withdrawals of water, which are not related to the proposed change in diffuser location. Therefore, the proposed project is not anticipated to impact groundwater.

5.13 Recreation

Lands along the immediate Lake Lanier shoreline are designated by the USACE Lake Lanier Shoreline Management Plan as prohibited access, protected lakeshore, public recreation, and limited development. The lake is an important asset for the City, County, and the other nearby or adjacent counties and communities. Its use as a recreation area brings substantial economic benefit to these communities by providing numerous leisure activities for visitors and residents. Placement of the new diffuser into the lake is not anticipated to directly impact the special purpose areas around the lake; however, placement of the pipeline will convert approximately 1.12 acres of conservation land to a utility easement. Therefore, the proposed project is anticipated to have minimal impacts on recreation.

5.14 Hazardous and Toxic Materials/Wastes

Previously, one leaking underground storage tank was identified on the LWRF property. However, this tank has been removed and a No Further Action (NFA) status is on record with the EPD. A database search did not identify any other UST or hazardous materials sites within a one-mile radius of the Linwood property. Because the onsite tanks are underground and no other tanks or hazardous wastes are nearby, placement of the new diffuser into the lake will not cause any direct impacts to hazardous and toxic materials or wastes.

5.15 Environmental Justice

Executive Order 12898, *Federal Actions to Address Environmental Justice in Minority Populations and Low-Income Populations*, requires federal agencies to address environmental justice (EJ) for all actions by identifying disproportionately high and adverse effects on minority or low-income populations. If disproportionate impacts on these populations are identified, efforts must be made to avoid or mitigate the effects. This mandate requires two related assessments: whether a minority or low-income population is present within a project area, and if so, whether that population would suffer disproportionately high adverse effects from the project.

Environmental justice assessment techniques vary, but the use of a reference area for comparison is a generally accepted practice. The project study area has been established as the Linwood WRF service area. For this project, the City is used as the reference area since the Linwood WRF service area is primarily contained within the city limit. Race was analyzed at the Census block level and low-income populations were analyzed at the Census tract level. These are the smallest geographic areas for which each of these population characteristics are available. The blocks and tracts intersecting the Linwood WRF service area comprise the EJ study area (see **Figure 9,** Minority Populations and **Figure 10,** Low-Income Populations below).

Racial data were obtained from the 2010 Census. Minority populations include persons who identify themselves as Black/African-American, American Indian or Alaska Native, Asian, Native Hawaiian or Pacific Islander, Some Other Race, a combination of two or more races, or persons of Hispanic origin. Economic indicators for the 2010 Census are reported through the American Community Survey, which provides estimates for one, three, and five year periods and are updated annually. The 5-year (2007-2011) poverty level estimates were used as the measure for low-income populations. The City minority population percentage is 61.0 percent, and the City poverty level is 29.1 percent. If the minority or low-income population percentage of a Census block or tract exceeded these threshold levels, it was determined to be an area of potential EJ impact.

Minority Populations

The Linwood WRF service area intersects a total of 322 Census blocks. Of these blocks, 40 have minority population percentages that are greater than the threshold level of 61.0 percent and are therefore considered to be potential EJ impact areas. The high minority blocks are primarily located in the southern part of the study area. Additional high minority areas are located on the eastern study area boundary, and a few high minority blocks are located along Thompson Bridge Road. In 24 of the 40 high minority Census blocks, the Hispanic population is the predominant minority group. Blacks are the dominant group in the remaining Census blocks, and other minority groups are represented in small numbers throughout the high minority Census blocks and the rest of the service area. Refer to **Figure 9** for locations of minority populations in the service area.

Low-Income Populations

The Linwood WRF service area contains portions of eight Census tracts. The majority of the service area is comprised of four tracts; the remaining four tracts cover only very small sections of the service area. None of the Census tracts in the service area have low-income populations above the threshold level of 29.1 percent; therefore, none are considered to be potential EJ impact areas for low-income populations. However, all of these tracts have low-income populations; the percentages range from 12.0 to 21.4 percent of the total populations. Refer to **Figure 10** for locations of low-income populations in the service area.

There is no population at the project site. An apartment complex (North Pointe Apartments) is located at the existing entrance to the LWRF, however the complex or associated viewshed will not be affected by the Proposed Action. Because there are no environmental justice populations living on the project site, placement of the new diffuser into the lake will not directly impact these populations.

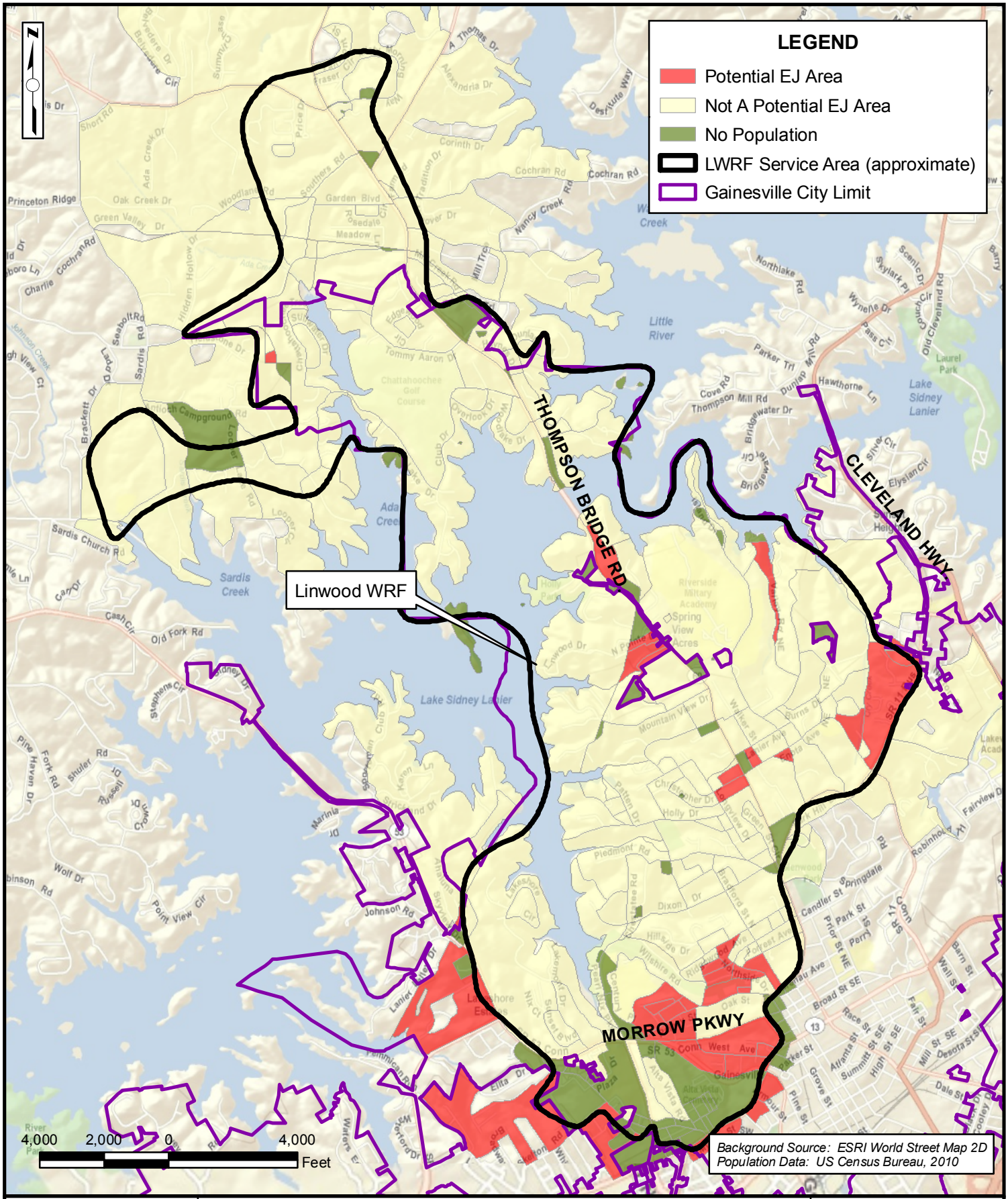

LINWOOD WATER RECLAMATION FACILITY
RECLAIMED WATER PIPELINE AND DIFFUSER
ENVIRONMENTAL ASSESSMENT

Date: December 2012
Scale: 1" = 4,000'
Project: JJ205139

ENVIRONMENTAL JUSTICE ANALYSIS: MINORITY POPULATIONS

Figure 9

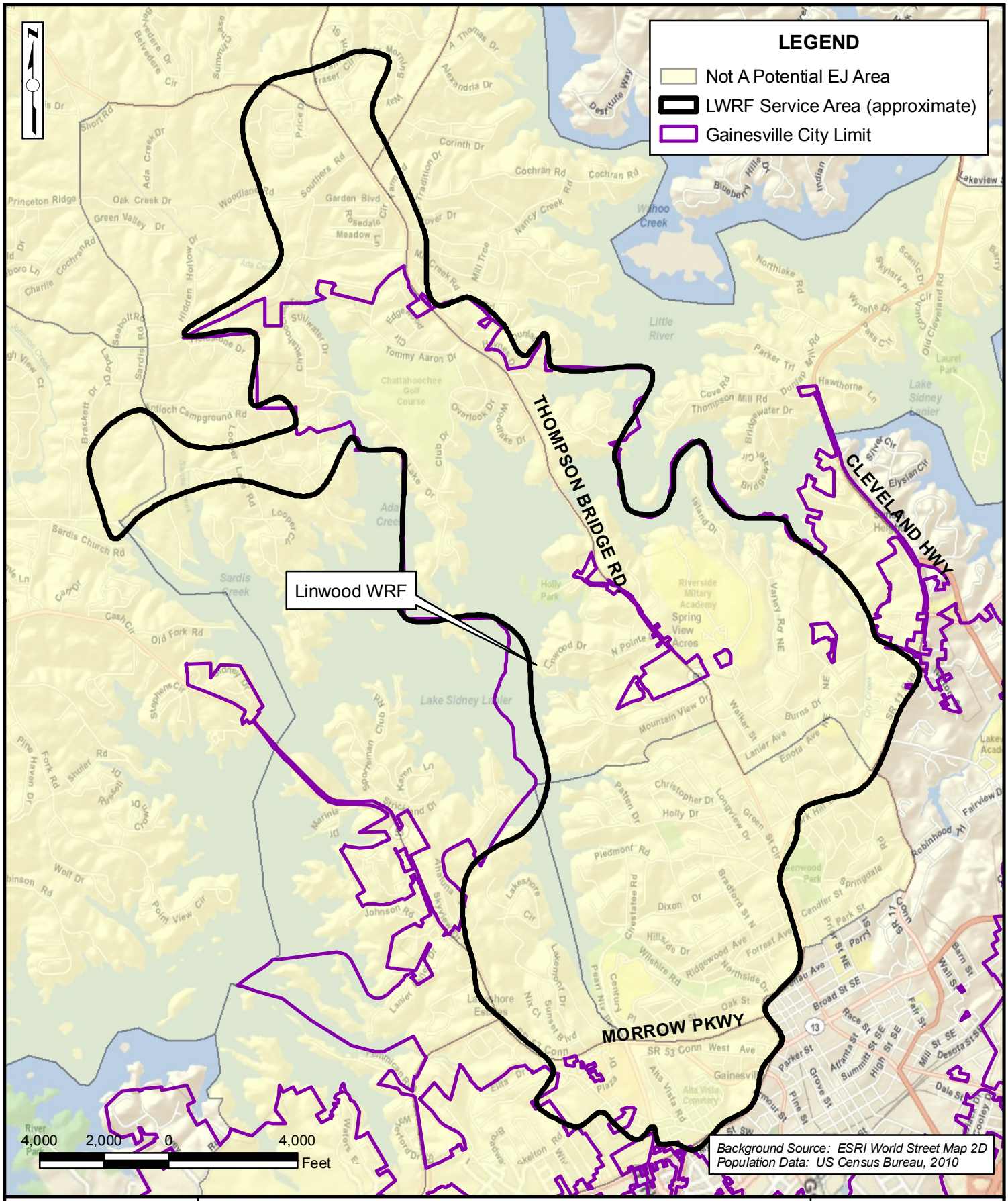

LINWOOD WATER RECLAMATION FACILITY
RECLAIMED WATER PIPELINE AND DIFFUSER
ENVIRONMENTAL ASSESSMENT

Date: December 2012
Scale: 1" = 4,000'
Project: JJ205139

ENVIRONMENTAL JUSTICE ANALYSIS: LOW-INCOME POPULATIONS

Figure 10

Conclusion

The Linwood WRF service area contains both minority and low-income populations, and 40 service area Census blocks are considered to be potential EJ areas in terms of race. Low-income populations are present also, although none of the service area Census tracts are above the threshold level determined for this project. The nature of this project is such that it is not likely to cause disproportionate adverse effects to EJ populations, as any negative impacts that could result from project construction would affect all segments of the population. Therefore, disproportionately high and adverse effects to EJ populations are not anticipated to result from this project. The proposed project complies with Executive Order 12898.

5.16 Protection of Children

The EO 13045, Protection of Children from Environmental Health Risks and Safety Risks (21 April 1997), recognizes a growing body of scientific knowledge that demonstrates that children may suffer disproportionally from environmental health risks and safety risks. These risks arise because children's bodily systems are not fully developed; because children eat, drink, and breathe more in proportion to their body weight; because their behavior patterns may make them more susceptible to accidents. Based on these factors, the President directed each Federal agency to make it a high priority to identify and assess environmental health risks and safety risks that may disproportionally affect children. The President also directed each Federal agency to ensure that its policies, programs, activities, and standards address disproportionate risks to children that result from environmental health risks or safety risks. The nature of this project is such that it is not likely to cause disproportionate adverse effects to children, as any negative impacts that could result from project construction would affect all segments of the population. Therefore, disproportionately high and adverse effects to children are not anticipated to result from this project. The proposed project complies with the EO 13045.

5.17 Cumulative Impacts Summary

The CEQ's Regulations for Implementing the Procedural Provisions of NEPA (40 CFR §§1500-1508) require not only direct impacts, but also indirect and cumulative impacts (ICI) be evaluated for the "reasonably foreseeable" future. Reasonably foreseeable impacts are defined in 40 CFR 1502.22 as "impacts which have catastrophic consequences, even if their probability of occurrence is low, provided that the analysis of the impacts is supported by credible scientific evidence, is not based on pure conjecture, and is within the rule of reason." For this analysis, the "reasonably foreseeable" future is considered the 20-year horizon, as this is the time period set for the design year for the build condition.

Direct effects are caused by, and coincide in time and place with, the Proposed Action and were discussed in Section 5.0, Environmental Impacts of the Recommended Plan.

Indirect effects are caused by the proposed action and are later in time, but are still reasonably foreseeable. Indirect effects may include growth-inducing effects and other effects related to induced changes in the pattern of land use, population density or growth rate, and related effects on air and water and other natural systems, including ecosystems.

Cumulative effects are the impacts on the environment that result from the incremental impact of the Proposed Action, which when added to other past, present, and reasonably foreseeable future actions, can result from individually minor but collectively significant actions taking place over a period of time.

Indirect and Cumulative Effects

In Section 5.0, direct impacts were identified for flora, noise, water quality, and recreation. Not all of the impacts were adverse and most were minor and temporary in duration. Indirect and cumulative effects for those resources with direct effects will be discussed further in this section.

Flora
Any impacts to flora that will occur as a result of the proposed project are only temporary during construction and possibly maintenance activities and are not likely to cause permanent changes in wildlife habitat. Moreover, there are no suitable habitats for federal and state listed endangered/threatened species. Therefore, the proposed project is not likely to have any reasonably foreseeable indirect or cumulative impacts to flora.

Noise
Construction noise associated with the installation of the pipeline will be temporary and minor due to project design. Reclaimed water that is released through the proposed diffuser on the lake bottom will not generate noise. Further, there are no sensitive receptors should any incidental noise be generated. Therefore, no reasonably foreseeable indirect or cumulative impacts to noise levels are anticipated from the proposed project.

Water Quality
Due to Lake Lanier's role as a regional water supply reservoir, the proposed action is one of several similar past, present and likely future actions for surrounding communities that use Lake Lanier as an important component of their drinking water and/or water reclamation facilities. While the actions of other communities are similar in nature to the proposed action, indirect and cumulative impacts for the LWRF diffuser should be minor. It is reasonably foreseeable that the impacts would be minor because of increasingly stringent NPDES permit limits and Lake Lanier Water Quality Standards. Additionally, the older, less effective LWRF diffuser will be decommissioned as part of the proposed action which should result in a net reduction of adverse water quality impacts.

Recreation
The proposed placement of the new diffuser into the lake is not anticipated to impact the special purpose areas around the lake; however, placement of the pipeline would convert approximately one (1) acre of conservation land to a utility easement. This action is not similar in nature to the conversion of other conservation land at Lake Lanier and is not in addition to other past, present or reasonably foreseeable future actions. Therefore, the proposed project is not likely to have any reasonably forseeable indirect or cumulative impacts to recreation.

General Environmental Setting

The population projected for Hall County by 2025 reflects an increase of approximately 84% from 2005 levels, and, as noted in the Environmental Justice section above, much of that growth will be in the Hispanic population, while the Black and White populations are projected to decline in growth rate. Asian/Pacific Islander and Native American populations will also experience some growth within the County. The income analysis was based on per capita income and poverty levels, both of which show lower than the state average per capita incomes and higher than the state average poverty levels throughout a large portion of the study area. Minority and low-income populations meeting the criteria to be considered as areas of environmental justice are present within the study area.

The City's population is expected to increase substantially in the near future, with minority populations gaining a larger share of the total population. As the total population increases, the need for City services and utilities will also increase. This need for services and utilities will generally correspond with the growth in population, regardless of income levels or other socioeconomic factors.

Conclusions

In summary, the Proposed Action will allow reclaimed water to be more efficiently discharged to Lake Lanier, which is manipulated along with West Point Lake and Walter F. George Lake to increase navigational depths on the lower Chattahoochee and Apalachicola Rivers. It is reasonably forseeable that the proposed action would not cause indirect effects such as stimulating growth or changing the overall pattern of land use, population density or growth rate. Additionally, it is reasonably foreseeable that the proposed action would not causes cumulative impacts such as changes in hydrological regimes, loading of sediment, thermal or toxic pollutants, or loss of floral habitat/ recreational areas due to residential, commercial or industrial development. Therefore, it is reasonably foreseeable that the proposed project has minor and primarily temporary indirect and cumulative impacts to these resources.

6.0 ANY IRREVERSIBLE OR IRRETRIEVABLE COMMITMENTS WHICH WOULD BE INVOLVED SHOULD THE RECOMMENDED PLAN BE IMPLEMENTED

There are no irreversible or irretrievable commitments which would be involved should the proposed project be implemented.

7.0 ADVERSE ENVIRONMETAL EFFECTS WHICH CANNOT BE AVOIDED

No adverse environmental effects which cannot be avoided are anticipated. However, the project may be expected to produce some increased siltation during the construction phase. Any environmental harm would be minimized by standard sedimentation and erosion and hydrological control measures. These include the preservation of vegetation beyond the limits of construction where possible; early re-vegetation of disturbed areas to minimize soil erosion; inclusion of construction features for the control of predicted erosion and water pollution; the dumping of chemicals, fuels, lubricants, bitumens, raw sewage, other harmful waste into or alongside the lake during construction would be prohibited. Further, contractors would maintain compliance with terms of the NPDES permit for construction activities, including the preparation and implementation of an Erosion, Sedimentation, and Pollution Control Plan and a Comprehensive Monitoring Program.

8.0 THE RELATIONSHIP BETWEEN LOCAL SHORT-TERM USES OF MAN"S ENVIRONMENT AND MAINTENANACE AND ENHANCEMENT OF LONG-TERM PRODUCTIVITY

As previously noted, the proposed action will allow reclaimed water to be more efficiently discharged to Lake Lanier, which is manipulated along with West Point Lake and Walter F. George Lake to increase navigational depths on the lower Chattahoochee and Apalachicola Rivers. The Proposed Action will not change the existing land use or habitat from the current maintained grassed easement. Construction noise and air emission (if any) associated with the pipeline are temporary and minor due to project design. Increased growth and development in the City of Gainesville is occurring without the project, and the expansion of the LWRF will continue without the proposed project.

9.0 COORDINATION

An EID was prepared for the LWRF expansion, which included the proposed reclaimed water pipeline. A Joint Public Notice was issued for the EID as part of the document review process. Reviewing agencies included the USFWS, EPA, EPD, USACE, and SHPO. On April 15, 2002, the GDNR issued a Notice of No Significant Impact (NONSI) because no comments were received from reviewing agencies.

A Pre-Construction Notification (PCN) was submitted for this project on January 22, 2004 for use of Nationwide Permits (NWP) 12 (utility line activities) and 13 (bank stabilization). The Resource Managers Office of Lake Lanier and the Savannah District Regulatory Branch were involved with pre-application meetings and in written correspondence in reference to the Proposed Action. The NWPs for this project was issued on April 2, 2004.

The Department of Natural Resources was contacted on March 23, 2007 to confirm locations of known occupied bald eagle territory in reference to the Proposed Action. Based on this correspondence, no known eagle nests are indentified in the project area.

Federal and state agencies, such as the EPA, USFWS, SHPO, and GDNR will have the opportunity to comment on the Final Draft EA. All comments received in the Draft EA will be included in the Final EA.

10.0 REFERENCES

City of Gainesville and Hall County, *Gainesville and Hall County Comprehensive Plan*. http://www.hallcounty.org/files/pdfs/devserv/HCCP/CountySummaryAmendDocument.pdf. Adopted 2004. Amended 2005.

CH2MHill, *Community Watershed Assessment and Watershed Management Plan for Hall County and the City of Gainesville*. 2000.

Council on Environmental Quality. *Considering Cumulative Effects Under the National Environmental Policy Act*. http://ceq.hss.doe.gov/nepa/ccenepa/toc.pdf. 1997.

Cowardin, L.M., V. Carter, and F.C. Golet. *Classification of Wetland and Deepwater Habitats of the United States*. U.S. Fish and Wildlife Service. U.S. Department of Interior, Washington, DC. 1989.

Georgia State Board of Natural Resources. Water Issues White Paper. http://www.gaepd.org/Files_PDF/gaenviron/GADNR_WaterIssuesWhitePaper_May2001.pdf. 2001.

Georgia Department of Natural Resources. Geologic Map of Georgia. 1976.

Georgia Department of Natural Resources. *Tracking List of Special Concern Animals of Ge*orgia. http://www.georgiawildlife.com/sites/default/files/uploads/wildlife/nongame/pdf/rare_species_data/Tracking_List_of_Special_Concern_Animals_of_Georgia.pdf. GDNR, Wildlife Resources Division, Social Circle, Georgia. 2011.

Georgia Department of Natural Resources. *Tracking List of Special Concern Plants of Georgia*. http://www.georgiawildlife.com/sites/default/files/uploads/wildlife/nongame/pdf/rare_species_data/Tracking_List_of_Special_Concern_Plants_of_Georgia.pdf. GDNR, Wildlife Resources Division, Social Circle, Georgia. 2011

Georgia Department of Natural Resources. *Georgia Plant Watch List: Plants Needing Additional Documentation to Determine Conservation Status*. http://www.georgiawildlife.com/sites/default/files/uploads/wildlife/nongame/pdf/rare_species_data/Georgia_Plant_Watch_List.pdf. GDNR, Wildlife Resources Division, Social Circle, Georgia. 2011

Georgia Department of Natural Resources. *Report on Georgia's Environment*. 2001.

Georgia Environmental Protection Division. *Rules and Regulations for Water Quality Control Chapter 391-3-6*. Georgia Department of Natural Resources. November 2005.

Georgia Museum of Natural History. *Georgia's Wildlife Web Database*. http://naturalhistory.uga.edu/~GMNH/gawildlife/index.php. The University of Georgia and Georgia Department of Natural Resources, Athens, Georgia. 2008.

Georgia Natural Heritage Program. The Georgia Natural Heritage Program Database System. http://www.georgiawildlife.com/node/1366. Georgia Department of Natural Resources, Social Circle, Georgia. 2010.

Hall County, Georgia. www.hallcounty.org. Accessed 2006.

Hall County Convention and Visitor's Bureau. http://www.gainesvillehallcvb.org
Accessed 2006.

Hodler, T.W., and H.A Schretter. *The Atlas of Georgia*. Institute of Community and Area Development, University of Georgia, Athens. 1986.

Jordan, Jones, and Goulding, Inc. (JJG) *Flat Creek and Linwood Water Reclamation Facilities – Facilities Planning and Environmental Information Document*. Prepared for the City of Gainesville Department of Public Utilities. December 2001.

Jordan, Jones, and Goulding, Inc. *Diffuser Design for a New Effluent Outfall into Lake Lanier*. Technical Memorandum. January 20, 2004.

Kundell, J. E. *Diagnostic Feasibility Study of Lake Sidney Lanier, Georgia*. Prepared for the Georgia Department of Natural Resources, Environmental Protection Division under the US EPA Clean Lakes Program. 1998.

Limno-Tech, Inc. *Development of Linked Watershed and Water Quality Models for Lake Lanier*. Technical Report. 1998.

Limno-Tech, Inc. *Selection for Critical Period for Lake Lanier Modeling*. Technical Memorandum. April 8, 2003.

Limno-Tech, Inc. *Surface Water Hydrology and Water Quality*. Technical Report. December 20, 2006.

Metropolitan North Georgia Water Planning District. *Final Water Supply and Water Conservation Management Plan*.
http://documents.northgeorgiawater.org/Water_Supply_Water_Conservation_Plan_May2009.pdf
May 2009.

Metropolitan North Georgia Water Planning District. *WastewaterManagement Plan*. http://documents.northgeorgiawater.org/Wastewater_Plan_May2009.pdf. May 2009.

Metropolitan North Georgia Water Planning District. *Watershed Management Plan*. http://documents.northgeorgiawater.org/Watershed_Plan_May2009.pdf. May 2009.

Mitsch, W.J. and J.G. Gosselink. *Wetlands*, 3rd Edition. John Wiley & Sons, Inc., New York, NY. 920 pp. 2000.

National Park Service. National Register of Historic Places Database. http://nrhp.focus.nps.gov/natreghome.do?searchtype=natreghome. 2012.

Natural Resources Conservation Service. U.S. Department of Agriculture (USDA). Prime farmland web page. http://www.ga.nrcs.usda.gov/gasoil/prime.htm#table. Accessed 2006.

Natural Resources Conservation Service. U.S. Department of Agriculture (USDA). Soil Data Mart. http://soildatamart.nrcs.usda.gov/State.aspx.

NatureServe. NatureServe Explorer: *An Online Encyclopedia of Life*. http://www.natureserve.org/explorer. Version 4.0. 2012

Patrick, T.S., J.R. Allison, and G.A. Krakow. *Protected Plants of Georgia*. The Georgia Natural Heritage Program. Georgia Department of Natural Resources, Social Circle, Georgia. 1995.

The New Georgia Encyclopedia. http://www.georgiaencyclopedia.org/nge/Home.jsp. 2006.

Southeastern Archeology Services, Inc. *Archeological Survey of the Proposed Improvements to the Linwood Wastewater Treatment Facility*, Hall County, Georgia. July 2001.

U.S. Army Corps of Engineers. Mobile District. *Lake Sidney Lanier Shoreline Management Plan*. http://www.sam.usace.army.mil/lanier/LSMP_1988.htm. 1988.

U.S. Army Corps of Engineers. *Apalachicola-Chattahoochee-Flint Historical Data*. http://water.sam.usace.army.mil/gage/acfhist.htm. 2003. 2003a.

U.S. Army Corps of Engineers. Mobile District. *Final Environmental Information Impact Statement: Lake Sidney Lanier, Georgia*. November 2003. 2003b

U.S. Army Corps of Engineers. *Fish Attractor Location Maps*. http://www.sam.usace.army.mil/Missions/CivilWorks/Recreation/LakeSidneyLanier/MapRoom.aspx. Accessed 2006.

U.S. Department of Agriculture. Soil Conservation Service. *Soil Survey of Barrow, Hall, and Jackson Counties, Georgia*. http://soils.usda.gov/survey/online_surveys/georgia/GA606/BHJ.pdf. May 1977.

Wharton, C.H. *The Natural Environments of Georgia*. Produced Under a Grant from Georgia Department of Natural Resources, Office of Planning and Research. Georgia State University. Atlanta, Georgia. 1978.

Jordan, Jones & Goulding
6801 Governors Lake Parkway
Building 200
Norcross, Ga 30071
T 770.455.8555 | F 770.455.7391
www.jacobs.com