Draft

Environmental Assessment

for

Charleston Park Pedestrian Bridge
Lake Sidney Lanier
Cumming, Forsyth County, Georgia

US Army Corps of Engineers
Mobile District

Prepared by:

UNITED CONSULTING

November 2012

ENVIRONMENTAL ASSESSMENT
PROPOSED RELOCATION OF PEDESTRIAN BRIDGE AND TRAIL RE-ALIGNMENT

CHARLESTON PARK, LAKE SIDNEY LANIER
CITY OF CUMMING, FORSTYTH COUNTY, GEORGIA

1. INTRODUCTION:

This environmental assessment (EA) was prepared utilizing a systematic, interdisciplinary approach integrating the natural and social sciences and the design arts with planning and decision-making. The proposed action and its alternatives are evaluated in multiple contexts for short-term and long-term effects and for adverse and beneficial effects. This assessment indicates the effects on the human environment are well known and do not involve unique or unknown risks. It is not anticipated that this is a precedent-setting action, nor does it represent a decision in principle about any future consideration.

This EA was conducted in accordance with the National Environmental Policy Act (NEPA), the Council on Environmental Quality (CEQ) regulations implementing NEPA [40 Code of Federal Regulations (CFR) 1500-1508], and Engineer Regulation 200-2-2.

A public review period for this action will be conducted prior to the issuance of any Finding by posting the Draft EA on the U.S. Army Corps of Engineers website.

a. Location:

This EA relates to Charleston Park, which is an operating 154-acre day use area on Lake Sidney Lanier. Forsyth County currently leases the park from the U.S. Army Corps of Engineers (USACE). This lease has been in effect since March 1, 2005. Charleston Park is located approximately 7.5 miles from downtown Cumming and only 3 miles from Georgia Highway 400, less than an hour north of Atlanta. The park is assessable via a two-lane paved road off of State Route 369. The primary access to the Project Site is via Charleston Park Road. Figure 1, Figure 2, and Figure 3 identify the location of the project and are included in **Appendix A.**

This EA has been prepared specifically to evaluate the proposed alternative location for the pedestrian bridge and not the entire park. The previously approved Master Plan, dated October 17, 2007, proposed a multi-use trail through the wooded portions of the property, which included a 200-foot long pedestrian bridge crossing a portion of the lake. This EA specifically addresses only a requested change to the bridge location and minor adjustments to the trail location to allow connection to the new bridge location. The intent of this EA is to assess potential environmental impacts from this proposed modification as further outlined below.

b. Project History:

A Master Plan was previously prepared by the USACE, Mobile District for the Charleston Park property. The previous Master Plan, entitled *Charleston Access Charleston Cove C.G. Recreation Development Concept Diagram* (Plate 65A), was prepared around 1987. This Plan included the existing facilities (parking, boat launch, picnic and restroom facilities), along with

an overnight campground area on the currently wooded portions of the site. The campground area included additional parking, roads, and restroom facilities, as well as tent camping sites, RV/trailer camping sites, bathhouse facilities, and a swimming beach. This previous Plan is provided in **Appendix B**.

In 2007, a Conceptual Site Plan was prepared (plan dated October 17, 2007) and approved by the USACE (approval Memorandum dated December 12, 2007). This revised plan included the additional parking areas on the north portion of the site, but provided a much lower intensity use of the wooded portions of the park. The changes consisted of replacing the tent and RV camping sites and associated roads and parking with an approximately seven mile long multi-use natural surface trail with two bridges, and five pavilions. One of the bridges was to be a ten-foot wide by 200-foot long prefabricated bridge over an inlet of the lake and the other was an eight-foot wide by 15 to 25-foot long wood/timber bridge. This Concept Plan was reviewed by the USACE and a Memorandum was issued, which concluded "The PDT has reviewed the master development plan and considered the proposed consistent with Corps policies, NEPA requirements and DR 1110-1-3". A copy of the Conceptual Master Plan Executive Summary, Conceptual Site Plan, and the approval Memorandum are included in **Appendix B**.

c. Proposed Action:

The proposed action includes approval of a slight modification to the Master Plan, which consists of the construction of a pedestrian bridge over a small stream located on the northern portion of the park property. The proposed pedestrian bridge will be approximately 55 feet long and ten feet wide. The bridge is to be constructed of steel and wood and will be located at an elevation of approximately 1,074 feet above mean sea level. The bridge is necessary to complete the trail system and provide pedestrian and bicycle access to the remainder of the park. In addition to the bridge construction, minor adjustment to both sides of the trail will occur to align the trail with the new bridge location along with minimal fill placement to match the grade of the trail to the bridge elevation. Supports for the bridge will be placed outside the limits of the stream channel and the construction of the bridge is not anticipated to result in disturbance or impact to the stream or nearby wetland areas. The impacts associated with the bridge will be discussed later in the document. A copy of the bridge plans has been included in **Appendix D**.

d. Purpose and Need for the Proposed Action:

The construction of the multi-use trail is being conducted to complete the previously approved Conceptual Master Plan and provide additional outdoor recreation opportunities. The purpose of the proposed bridge is to provide pedestrian and bicycle access to the currently undeveloped portion of the park. This portion of the park is land-locked and no other access via public land is available. Attempts were made to obtain access through an easement across private property; however, those attempts were unsuccessful. The proposed alternative bridge location, as evaluated in this report, is being considered as an option with less impact on the environment and substantially less cost to the county.

e. Authority:

The construction of Lake Sidney Lanier (originally the Buford Dam multi-purpose project) was authorized by the Rivers and Harbors Act approved July 24, 1946, Public Law 525, 79th Congress, 2nd Session. The construction of Buford Dam was completed in 1957 and Lake Sidney Lanier was designated as such by Public Law 56-457, and approved on March 29, 1956. Recreational facilities were authorized by Section 4 of the Flood Control Act of 1944 as amended (Title 10, USC 460d).

The Final EIS for Lake Sidney Lanier (Lanier EIS), dated November 2003 by the USACE, indicated natural, cultural, and developed resources of projects are to be managed in the public interest, providing the public with safe and healthful recreational opportunities while protecting and enhancing resources.

Title 16, United States code, Section 460d, states in pertinent part: "The Chief of Engineers, under the supervision of the Secretary of the Army, is authorized to construct, maintain, and operate public park and recreational facilities at water resources development projects under control of the Department of the Army, to permit the construction of such facilities, by local interest (particularly those to be operated and maintained by such interests), and to permit the maintenance and operation of such facilities by local interest." "Preference shall be given to Federal, State, or local governmental agencies, and agencies for the use of all or any portion of a project area for any public purpose, when the Secretary of the Army determines such action to be in the public interest, and for such periods of time upon such conditions he may find advisable."

Pursuant to the Recreation Lakes Act of 1996, Public Law 104-333 (http://corpslakes.usace.army.mil/employees/cecwon/pdfs/nat_lakes.pdf), the President of the United States appointed the National Recreation Lakes Study Commission to review opportunities for enhancing water-based recreation at Federal Lakes. The Commission's charge, in part, was to "make recommendations on alternatives for enhanced recreation opportunities . . . emphasizing private sector initiatives in concert with State and local units of government". The Commission's recommendations can be found in their report, "Reservoirs of Opportunity".

By memorandum of November 20, 2000, Major General Hans A. Van Winkle, Deputy Commander for Civil Works, USACE named Lake Sidney Lanier one of thirteen Recreation Demonstration Laboratories. These laboratories are empowered, within existing laws, to test or prototype new ways of doing business that improves products or services through innovative planning, development, implementation, and management of recreation programs or activities.

2. ENVIRONMENTAL SETTING WITHOUT THE PROJECT:

a. General Environmental Setting:

Approximately 154 acres of Charleston Park exists above the 1,071 National Geodetic Vertical Datum (NGVD) normal pool elevation of Lake Sidney Lanier. Access to the Park is via Mashburn Drive and Charleston Park Road, which are two-lane, asphalt-paved roads that merge and enter the northwestern end of the park. Currently, only 14 acres on the north end of the park is open for public access and utilized for recreation. The remainder of the park is closed to the

public due to inaccessibility. The existing developed portion offers a mix of amenities such as lake-side picnic tables, restroom facilities, parking areas, a dock, and a three-lane boat ramp. The remaining land is currently wooded and mostly undeveloped. Expansion of the park to the remaining wooded portion has been partially completed, with a portion of the multi-use trail having been constructed. Currently, access to this area is via a makeshift timber and wood bridge. This existing bridge was reportedly constructed many years ago by nearby property owners before the property was managed by Forsyth County. The existing bridge consists of what appear to be old telephone poles and wood slats attached across the poles.

The general project area surrounding the existing and alternative bridge locations is a mix of mature hardwood and pine forest, scrub-shrub wetland areas, and shallow, open water associated with the lake inlet. A perennial stream, approximately 20 to 30 feet wide, flows through this area and into the lake. Additional information regarding the existing conditions specific of the proposed bridge area is provided below and is referred to herein as the Project Area.

b. Significant Resource Description:

(1) Water Quality.

The Georgia Department of Natural Resources (DNR) and the U.S. Environmental Protection Agency share the responsibility of maintaining water quality at Lake Sidney Lanier. Georgia DNR conducts water quality tests at a fixed point just north of Buford Dam and the USACE conducts fecal coliform bacteria at the 23 public beach areas due to the large goose population at Lake Sidney Lanier. At the time of the issuance of the Lanier EIS in November 2003, none of the public beaches had to be closed due to high concentrations of fecal coliform bacteria at the public beaches.

The Lanier EIS indicated that the overall water quality is considered satisfactory for the designated uses of the reservoir. The areas in the Chattahoochee River and Chestatee River arms of the lake, where the water is shallower, reportedly have the highest levels of turbidity, total suspended solids, chlorophyll a, and nutrient concentrations, while the main body of the lake has the greatest transparency and the lowest fecal coliform counts and nutrient concentrations.

The stream flowing through the Project Area is an unnamed tributary and is not listed on the Georgia Environmental Protection Division (GA EPD) 303(d) list of impaired waters. Other than sediment loading and deposition that occurs from the natural scour of stream banks and sediment transport through the stream, and agricultural and urban runoff from the upstream watershed, no apparent water quality impact sources were noted.

(2) Fishery Resources.

Lake Sidney Lanier is a popular recreational fishery. The EIS for the ACF river basin, dated November 2003 by the USACE, indicated five critical fish species in Lake Sidney Lanier. These five species include crappie (*Pomoxis nigromaculatus*), largemouth bass (*Micropterus salmoides*), spotted bass (*Micropterus punctatus*), striped bass (*Morone saxatilis*), and white bass (*Morone chrysops*). In addition to the five critical fish species, other important fish species in the project area include sunfish (*Lepomis spp.*), channel catfish (*Ictalurus punctatus*), white catfish (*Ameiurus catus*), and carp (*Cyprinus carpio*). Some species of trout exist in Lake Sidney Lanier and below the Buford Dam in the Chattahoochee River. Trout are also stocked in a “put-and-take” fishery below the Buford Dam by the GDNR. Fishing is one of the major recreational

draws of Lake Sidney Lanier. Due to the stream size and shallow water depth in the Project Area, fish species in the Project Area would likely be limited to the smaller sunfish species and small specimens of largemouth bass and the other common fish species, which were observed during the field evaluation.

(3) Wildlife Resources and Habitat.

The existing vegetation varies across the Project Area includes stands of mature hardwood forest, mixed pine/hardwood forest, forested and scrub-shrub wetland, and shallow open water. The upland and lowland forest included yellow-poplar (*Liriodendron tulipifera),* southern red oak (*Quercus falcata*), northern red oak （*Q. rubra*), hickories (*Carya* spp.), loblolly pine (*Pinus taeda*), sweetgum (*Liquidambar styraciflua*), red maple (*Acer rubrum*), box elder (*A. negundo*), black cherry (*Prunus serotina*), flowering dogwood (*Cornus florida*), Chinese privet (*Ligustrum sinense),* and ironwood (*Carpinus virginiana*).

The wetlands within the Project Area are vegetated with red maple, black willow (Salix nigra), sweet-gum, black gum (*Nyssa sylvatica*), swamp dogwood (*C. amomum*), and button bush (*Cephalanthus occidentalis*).

Photos of the Project Area are included as **Appendix C.**

Typical wildlife species found in the ACF river basin include whitetail deer (*Odocoileus virginianus),* raccoon (*Procyon lotor*), Virginia opossum (*Didelphis virginiana*), Eastern wild turkey (*Meleagris gallopavo*), bobwhite quail (*Colinus virginianus*), mourning dove (*Zenaida macroura*), eastern cottontail rabbit (*Sylvilagus floridanus*), and gray squirrel (*Sciurus caroliniensis*). Several avian species are also found in the Lake Sidney Lanier area. Some common summer species include Canada geese (*Branta canadensis*), great blue herons (*Ardea herodias*), green-backed herons (*Butorides striatus*), kingfishers (*Ceryle alcyon*), and ospreys (*Pandion haliaetus*) are common during the summer.

The vegetative community diversity of the Project Area (shallow water, wetlands, upland forests) provides good habitat for a variety of bird and other animal species. Species observed or likely inhabiting the Project Area include the gray squirrel, swamp rabbit (*S. palustris*), Eastern chipmunk (*Tamias striatus*), white-tailed deer, Canada geese, wood ducks (*Aix sponsa*), mockingbird (*Mimus polyglottos*), green frog (*Rana clamitans*), painted turtle (*Chrysemys picta*), black rat snake (*Elaphe obsoleta*), sunfish, and largemouth bass. In addition, several other small mammals, herpetofauna and songbird species are likely present as well. During the on-site field survey of the Project Area, no unusual or protected species were observed on the site.

(4) Wetlands and Streams.

A wetland delineation was performed on the Project Area by a wetland biologist from United Consulting. The wetland delineation included a review of available wetland map, soils map, and a routine on-site field delineation. A summary of the map review and site investigation is provided below.

The National Wetland Inventory (NWI) map of the Project Area did not indicate previously mapped wetland areas on the Project Site. Lake Sidney Lanier is mapped as a palustrine permanently flooded aquatic system, and would be classified as a deep water habitat.

The soil survey map for the Project Site indicated Cecil clay loam, Madison fine sandy clay loam, and Starr loam soils mapped on the Project Site. This soil type is not included on either the local or the national hydric soils lists. Copies of the NWI map and soil survey map are included as Figures 4 and 5, respectively, and are located in **Appendix A.**

Although the NWI map and Soil Survey map did not indicate previously mapped wetlands, based on the on-site investigation of the Project Area in June of 2011 by a qualified wetlands biologist, wetland areas **were identified** within the Project Area. A routine wetland delineation was performed in accordance with the *Corps of Engineers Wetlands Delineation Manual*, dated January 1987, and the *Interim Regional Supplement to the Corps of Engineers Wetland Delineation Manual: Eastern Mountains and Piedmont Region*, dated July 2010. The limits of the wetlands and the perennial stream within the Project Area were flagged in the field and mapped using a Trimble GeoXH global positioning system. The limits of the wetlands were incorporated onto the Forsyth County GIS map. The limits of the wetlands within the Project Area are shown on Figure 7 of this report. The perennial stream and wetland area are considered federal jurisdictional waters. Based on the field delineation, 0.55-acres of jurisdictional waters, including wetlands, are located in the Project Area.

(5) Threatened and Endangered Species.

Six at-risk animal species and sixteen at-risk plant species are listed on the Georgia DNR website as occurring in the watershed that includes Lake Sidney Lanier. At-risk species are those that are identified by the U.S. Fish and Wildlife Service (FWS) or the State of Georgia as endangered, threatened, rare, unusual, or candidate species for listing. Federally listed threatened and endangered species are protected under the Endangered Species Act of 1973. This Act was designed to protect critically imperiled species from extinction due to "the consequences of economic growth and development untempered by adequate concern and conservation". The State of Georgia has its own lists of plants and animals (as developed by the Georgia DNR and approved by the legislature) that are considered threatened or endangered and may also be protected under state law. The listed species and their status are included below in Table 1.

Table 1 – Federal and State Listed Protected Species Identified In Lake Sidney Lanier Watershed

SPECIES	FEDERAL STATUS	STATE STATUS
ANIMAL SPECIES		
Chattahoochee Crayfish (*Cambarus howardi*)	No Federal Status	Threatened
Bluestripe shiner (*Cyprinella callitaenia*)	Threatened	Rare
Delicate spike (*Elliptio arctata*)	No Federal Status	Endangered

Peregrine falcon (*Falco peregrinus*)	No Federal Status	Rare
Shinyrayed pocketbook (*Hamiota subangulata*)	Endangered	Endangered
Highscale shiner (*Notropois hypsilepis*)	No Federal Status	Rare
PLANT SPECIES		
Granite Dome Sedge (*Carex biltmoreana*)	No Federal Status	Threatened
Pink ladyslipper (*Cypripedium acaule*)	No Federal Status	Unusual
Smooth purple coneflower (*Echinacea laevigata*)	Endangered	Endangered
Mountain witch-alder (*Fothergilla major*)	No Federal Status	Threatened
Goldenseal (*Hydrastis canadensis*)	No Federal Status	Endangered
Small whorled pogonia (*Isotria medeoloides*)	Threatened	Threatened
Sweet pinesap (*Monotropsis odorata*)	No Federal Status	Threatened
Indian olive (*Nestronia umbellula*)	No Federal Status	Rare
Monkeyface orchid (*Platanthera integrilabia*)	Candidate	Threatened
Dwarf sumac (*Rhus michauxii*)	Endangered	Endangered
Bay starvine (*Schisandra glabra*)	No Federal status	Threatened
Georgia aster (*Symphyotrcihum gerogianum*)	Candidate	Threatened
Florida torreya (*Torreya taxifolia*)	Endangered	Endangered
Ozark bunchflower (*Veratrum woodii woodii*)	No Federal Status	Rare
Piedmont barren strawberry (*Waldsteinia lobata*)	No Federal Status	Rare
Eastern turkeybeard (*Xerophyllum asphodeloides*)	No Federal Status	Rare

A field investigation was conducted on the property by wildlife biologist Mr. David P. Huetter with United Consulting in June 2011. Based on the site conditions and field observations, the forest habitat on the Project Area represents potential habitat for some of the listed plant species. However, during our field investigation, none of these plant or wildlife species were identified on the Project Area.

(6) Historic and Archeological Resources.

With the exception of a few small tracts to the north, the fee-owned government lands surrounding Lake Sidney Lanier were surveyed for cultural resources between the late 1930s and 1987. These surveys are referenced in Section *3.10 Cultural Resources* of the *Final Environmental Impact Statement for the Operation and Maintenance of Lake Sidney Lanier, Georgia*. According to the EIS, only six archaeological sites and no standing historic structures eligible or potentially eligible for listing on the National Register of Historic Places (NRHP) are located within the government fee-owned lands surrounding Lake Sidney Lanier. The results of these surveys were coordinated with the Georgia State Historic Preservation Office (SHPO) as part of the process for completing the *Historic Properties Management Plan for Sidney Lanier Project, Georgia* in March 1997. The Georgia SHPO concurred with the findings and recommendations outlined in that document, and no further coordination is needed for this area.

Further, a literature review and research of the Project Site area was conducted by a professional cultural resource firm, R.S. Webb & Associates, to determine if any of the previously identified archaeological sites were located within the Project Area. The research included reviewing files at the SHPO, as well as the Georgia Archaeological Site File in Athens. Three of the previously identified sites were located on or in the vicinity of Charleston Park. None of these are the six archaeological sites eligible or potentially eligible for listing on the NRHP and none are located within the Project Area. No historic structures are located within the Project Area. Based on this information, no properties listed on or eligible for listing on the NRHP appear to be located within the Project Area.

American Indian tribal governments requested in a May 2004 consultation meeting that only those undertakings, which may affect American Indian cultural properties, be coordinated. Because the proposed action will not affect cultural properties, this document will not be coordinated with federally-recognized tribes.

In accordance with the Native American Graves Protection and Repatriation Act of 1990 and 43 CFR 10, the following provision must be observed. In the unlikely event that an inadvertent discovery of previously unknown cultural resources or potential human remains are uncovered during construction, all work must cease, the discovery must be protected, and the Mobile District project manager, the Lake Sidney Lanier project manager, as well as the Georgia State Archaeologist must be contacted immediately.

(7) Land Use.

Currently, Charleston Park is utilized as a day use area for recreation, boating access and picnics. The Park has been developed accordingly, and includes parking areas, a dock, restroom and picnic facilities, and launch ramp. The remaining land is wooded and is not currently utilized. Surrounding properties consist of residential land, rural pasture and forest land, and boat storage areas.

(8) Navigation.

Navigation is an authorized purpose of the Buford Dam Project based on its ability to store large quantities of water and provide low flow augmentation for commercial navigation downstream in the Chattahoochee and Flint Rivers. Commercial navigation extends to Bainbridge, Georgia

on the Flint River and to Columbus, Georgia, and Phenix City, Alabama on the Chattahoochee River. However, navigation on Lake Sidney Lanier is limited to recreational boat traffic. As one of the most heavily visited lakes in the country, recreational traffic is quite heavy at times, particularly on holidays and weekends.

(9) Recreation.

Lake Sidney Lanier is a common recreational area for local residents of Cumming and Forsyth County, metro Atlanta and out of town visitors. Common recreational activities at the lake include water sports, fishing, swimming, and pleasure boating. Charleston Park is lightly used during weekdays, but is heavily used on the weekends primarily for boating access. The Project Area is not currently used for recreation or other purposes due to the inaccessibility.

(10) Air Quality.

Charleston Park is located within Forsyth County, Georgia which is located in the greater Atlanta nonattainment zone for ozone and particulate matter. The nonattainment is primarily due to vehicular emissions and particulate matter. Current activities at Charleston Park do not significantly contribute to the nonattainment condition. The State of Georgia is currently working on a State Implementation Plan to mitigate the identified air nonattainment conditions.

(11) Vehicular Traffic.

Charleston Park is located at the terminus of Mashburn Drive and Charleston Park Road. Development along these roads is single-family residential, rural farmland, and boat storage. Current vehicular traffic is limited to local residents and recreational users of the lake.

(12) Floodplain.

The local FEMA Floodplain map (13117C 0160E) was reviewed. It appears, based on the map review, the Project Area is located below the 100-year flood elevation of 1,085 feet amsl. A copy of the floodplain map is included as Figure 6.

(13) Noise.

The facilities at Charleston Park are relatively isolated and therefore do not routinely disrupt typical day to day activities on the properties surrounding the Park. Potential sources for noise at the Park and the surrounding properties would be primarily from vehicular and boat traffic and typical maintenance activities (grass cutting, etc.).

(14) Aesthetics.

The aesthetics of Charleston Park provide a park-like atmosphere with some grassed areas with scattered large pines and hardwoods. The other portions of the Park property provide a natural, wooded condition with some steep slopes providing overlooks to the lake. The Project Area is generally an isolated wooded valley with an isolated atmosphere and minimal views of the lake.

(15) Prime and Unique Farmlands.

There are no prime farmlands or unique agricultural lands located on Charleston Park.

(16) Socio-economics.

Based on information from the U.S. Census Bureau (http://factfinder.census.gov/), the population of Forsyth County and the City of Cumming were 174,520 and 5,896, respectively in

2009. The nearby City of Gainesville and Hall County had a population of 35,750 and 187,743, respectively. Each of these areas had a nearly 100% or more population increase since 1990, with Forsyth County having the greatest increase of 295.9%. On February 5, 2008, Forsyth County voters approved the issuance of a $100 million Parks/Recreation and Green Space General Obligation Bond. The issue received overwhelming voter approval of 69-70% countywide, indicating widespread support for increase outdoor recreation opportunities and a demand for such. Currently, the Park provides minimal employment and income, but has a significant user base from the surrounding communities.

(17) Environmental Justice.

Executive Order (EO) 12898 of February 11, 1994 requires addressing, as appropriate, disproportionately high and adverse human health or environmental effects of Federal actions on minority and low-income populations. No minority or low-income communities are located in close proximity to the property. Charleston Park does not disproportionately impact minority or low-income populations.

(18) Protection of Children.

EO 13045 of April 21, 1997 requires, to the extent permitted by law and mission, identifying and assessing environmental health and safety risks to children posed by a proposed action. The existing condition of the Project Area does not represent a health or safety risk to children, as the area is currently posted by Forsyth County as closed to public use. However, if utilized by children, the current makeshift bridge does not provide adequate safety measures for children since no railings are present along the bridge.

(19) Hazardous and Toxic Materials.

No indications of petroleum or hazardous substance contamination were observed at Charleston Park or more specifically, the Project Area. No storage tanks or other containers were present on the site. The information reviewed did not indicate a concern for hazardous or toxic materials.

3. DESCRIPTION OF THE RECOMMENDED PLAN:

The currently approved master plan for the Park includes the construction of a multi-use trail, pavilions, and a bridge connecting the existing day-use area of the park to the proposed trail area. The existing master plan proposes a 200-foot long bridge over an inlet of the lake and wetland areas (Alternative 1).

The proposed action outlined in this EA specifically involves moving the proposed bridge crossing location. The bridge would be moved from the previously approved location, to an upstream location (Alternative 2) where the length of the crossing will be smaller (less than 30 feet across the stream, with a bridge length of only 55 feet) and where no disturbance to the lake, stream or wetlands will occur. The project will also include minor re-alignment of the trail system to connect to the new bridge.

Please refer to the attached Exhibit A in **Appendix D**, which shows the location of the previously approved bridge, the location of the delineated wetland areas, and the existing and proposed alternative bridge locations.

4. ALTERNATIVES TO THE RECOMMENDED PLAN.

a. "No Action" Alternative:

As evaluated in this EA, the "No-Action" alternative would be to proceed with construction of the multi-use trail and not construct the bridge at the approved location, but leave the existing, temporary bridge. Under the "No Action" alternative, the crossing to access the trail would not provide a long-term and safe route for pedestrians to access the trail. The primary advantage of this alternative would be the lack of disturbance to the environment that will occur from constructing a new bridge; however, the current bridge does not properly span the stream, with the end of the bridge terminating at the edge of the wetland area. Further, due to the current condition of the bridge and intended short-term use, this action would not satisfy the project purpose of providing long-term and safe access to the multi-use trail system.

b. Alternative 1 - Construct Bridge As Shown on the Approved Concept Plan:

This alternative would include constructing the 200-foot long bridge as shown on the approved October 2007 Concept Plan. This alternative, while previously reviewed and approved by the USACE, would require clearing the vegetation along the slopes and through a wetland area. In addition, it would be necessary to install structural supports within a scrub-shrub wetland area. While detailed design drawings for this alternative have not been developed, it is likely that this alternative would result in temporary impacts to the wetland associated with the clearing of vegetation and construction, along with the discharge of permanent fill material into the wetland area and below the 1,071 foot normal pool elevation for installation of the structural support footings. Further, this would result in substantially greater construction costs than the No Action Alternative or Alternative 2. Appropriate development plans, including sediment and erosion control design, and permitting would be completed prior to construction. However, upon completion of the field evaluation and initial review of this Alternative compared Alternative 2 described below, it was determined that this alternative had a greater impact on the environment, particularly with regard to wetland, soil, and vegetation disturbance, and therefore, this alternative was not evaluated further.

c. Alternative 2: Proposed Alternative Bridge Location (Recommended Alternative):

The alternative bridge location includes the construction of a steel and wood bridge that would be approximately 55 feet long and 10 feet wide. This bridge would span the perennial stream that flows into the lake and would not require the placement of structural supports within the stream channel or wetland areas. Support footings would be constructed in the non-wetland areas adjacent to the stream and no wetland disturbance or impact is proposed. This alternative would require an adjustment to approximately 20 feet of trail on each end of the bridge to connect to the existing trail that has been constructed. In doing this, the existing trail segments that connect to the temporary bridge would be abandoned, covered with natural mulch or leaf litter, and allowed to naturally re-vegetate and the temporary bridge removed. Appropriate development plans, including sediment and erosion control design, and permitting would be completed prior to construction. No wetland impact permitting or individual water quality certification would be required.

5. ENVIRONMENTAL IMPACT OF THE NO ACTION PLAN:

a. Biological and Physical Impacts:

The no-action alternative would result in no initial biological or physical impacts to the Project Area, but would require regular maintenance of the temporary bridge. Further, long-term use of the temporary bridge would result in possible impact to the stream or wetland area as a result of periodic repairs and alternation of the bridge to provide long-term use. Details of the potential impacts are provided below.

(1) Water Quality.

The no-action alternative would not result in water quality impacts to Lake Sidney Lanier. Occasional sediment discharges to the stream could occur during repair of the temporary bridge or if damage occurred to the bridge during extreme rain events.

(2) Fishery Resources.

The no-action alternative would not disrupt or improve the fishery resources around Lake Sidney Lanier.

(3) Wildlife Resources.

No protected species have been identified within the Project Area. The no-action alternative would not affect current wildlife resources at the property.

(4) Wetlands and Streams.

The no-action plan would not result in construction; therefore, initially, no wetlands would be impacted. However, long-term use of the temporary bridge would require regular maintenance and possible disturbance to the small area of wetland at the end of the bridge.

(5) Endangered and Threatened Species.

The no-action alternative would not have a significant impact on threatened or endangered species at the Project Site.

(6) Historic and Archeological Resources.

No significant evidence of cultural resources was identified on the Project Site. Further, the no-action alternative would not have an impact on historic or archaeological resources.

(7) Land Use Changes.

The No Action alternative would not result in changes in land use. The currently approved plan allows for the construction of the multi-use trail and associated crossing.

(8) Navigation.

The no-action alternative would not change the current conditions at the property. The trail and bridge do not affect navigation on the lake.

(9) Recreation.

The no-action alternative would still provide for construction of the trail system, but utilization of the temporary bridge would not provide a safe, long-term connection to the trail system.

(10) Air Quality.
The no-action alternative would not result in additional air quality impacts to Lake Sidney Lanier or the surrounding area.

(11) Vehicular Traffic.
The no-action plan would not affect the vehicular traffic associated with Charleston Park. The currently approved plans already provide for additional parking areas at the park and construction of the multi-use trail.

(12) Floodplain Impacts.
The no-action alternative would not result in impacts to the 100-year floodplain. While the temporary bridge is located below the 1,086 flood elevation, no fill material would be placed in the floodplain. Long-term utilization of the temporary bridge could result in damage to the bridge due to the construction techniques utilized, which were not intended to provide long-term use, and the position within the floodplain.

(13) Noise Impacts.
The no-action alternative would not result in increased noise impacts at the Project Area.

(14) Aesthetics.
The aesthetics of Lake Lanier and the Project Area would remain the same under the no-action alternative.

(15) Prime and Unique Farmland.
There are no prime farmlands or unique agricultural lands located on the Project Area. Therefore, no impacts to prime farmlands or unique agricultural lands are anticipated under the no-action plan.

(16) Socio-Economics.
The no-action plan will not change the socio-economics of the community. The multi-use trail will provide additional recreational opportunities.

(17) Environmental Justice.
Executive Order (EO) 12898 of February 11, 1994 requires addressing, as appropriate, disproportionately high and adverse human health or environmental effects of Federal actions on minority and low-income populations. The no-action alternative would not disproportionately impact minority or low-income populations.

(18) Protection of Children.
EO 13045 of April 21, 1997 requires, to the extent permitted by law and mission, identifying and assessing environmental health and safety risks to children posed by the proposed action. The no-action alternative could result in increased risk to children due to the potential safety issues associated with the slightly more narrow existing bridge, unlevel surface, and lack of railings.

(19) Hazardous and Toxic Materials.

The no-action alternative would not have hazardous or toxic material impacts at the Project Area.

(20) Cumulative Impacts.

The Council on Environmental Quality defines cumulative effects as "the impact on the environment which results from the incremental impact of the action when added to other past, present, and reasonably foreseeable future actions regardless of what agency or person undertakes such other actions (40 CFR 1408.7)." Under the no-action alternative, it is not anticipated that cumulative effects would occur. No foreseeable future development is anticipated.

6. ENVIRONMENTAL IMPACT OF THE RECOMMENDED PLAN:

a. Biological and Physical Impacts:

The recommended plan consists of the construction of a small pedestrian bridge over a perennial stream and minor re-alignment of the trail. Unavoidable adverse effects would emanate, primarily from very minor land disturbance associated with construction activities and removal of small understory vegetation for the trail connections. Charleston Park has been designated for recreational purposes and the multi-use trail and alternative bridge location have already been approved. The impacts from this proposed alternative bridge are less than those of the previously approved bridge.

(1) Water Quality.

The proposed development activities associated with this project will be performed in accordance with Sediment and Erosion Control Requirements in Georgia and in a manner to minimize sediment loss to the Lake. Erosion control Best Management Practices (BMPs) will be utilized to minimize sediment loss and impacts to water quality. Construction of the small bridge will result in minimal soil disturbance and could result in a short-term and negligible increase in sedimentation within the lake. These potential minor impacts will be minimized by implementation of BMPs as required under the Sediment and Erosion Control Act and Forsyth County development codes. The operation of machinery will be outside the limits of the stream, and thus impacts to the stream are not anticipated. Further, the temporary crossing will be removed following construction of the new bridge. Disturbed soils in the area of the temporary crossing will be stabilized with typical BMPs. If a stream buffer variance is required, the county will apply for and obtain the variance from the Georgia EPD. All work performed during construction will be done in a manner which will not interfere with any legitimate water use of the Lake. It is not anticipated that individual water quality certification would be required.

(2) Fishery Resources.

The implementation of the plan would not significantly impact the local fishery. No discharge to the stream is proposed and the bridge will be placed above the stream and will not impede aquatic species movements.

(3) Wildlife Resources and Habitat.

While the Project Area currently provides habitat for some small mammals, songbirds, reptiles and amphibians, the proposed action will not result in a significant disturbance to the native

habitat. The proposed action will only involve construction and minimal vegetation disturbance to an area of approximately 1,000 square feet (0.02-acre). Long-term disturbance will be limited to pedestrian foot and bicycle traffic. The development is not anticipated to result in a significant impact on wildlife resources.

(4) Wetlands and Streams.

A wetlands delineation was performed for the Project Area. Wetlands were identified downstream of the proposed bridge location. A perennial stream (22-feet wide at the proposed bridge location) is located flowing through the Project Area to the lake. The location of the proposed bridge was selected to avoid the wetlands and also to cross the stream at one of the more narrow locations. No disturbance to the wetlands and no discharge into or disturbance of the stream is proposed. The wetland delineation for this project was conducted by a qualified wetland consultant and consultation with the USACE Regulatory Division should not be necessary as no wetland impacts are proposed under the preferred alternative.

(5) Endangered and Threatened Species.

No endangered or threatened species or critical habitat was identified on the Project Area. Therefore, the project is not anticipated to impact protected species. A request for review will be submitted to the FWS. The results will be provided in the final EA.

(6) Historic and Archeological Resources.

There are no known sites eligible for NRHP listing within the boundaries of the Project Area. Based on previous evaluations and review by the SHPO, the project will not likely impact significant cultural resources.

(7) Land Use Changes.

The recommended plan is consistent with the current use of the area as a park and will provide additional recreational opportunities. The proposed bridge location will not result in a significant land use change. The re-alignment of the trail will result in the removal of some small understory vegetation in areas approximately 20 feet by 5 feet, but will not significantly alter the land use of the area.

(8) Navigation.

The proposed action will not affect navigation on Lake Sidney Lanier. Further, the water depth and size of the perennial stream does not allow for navigation of the stream; therefore, the bridge will not affect navigation.

(9) Recreation.

Construction of the bridge will allow a safe, long-term connection to the multi-use trail system being constructed through the wooded portion of Charleston Park. This bridge and the trail re-alignment will provide additional low-impact outdoor recreational opportunities.

(10) Air Quality.

The proposed improvements will not adversely affect the ambient air quality of the area. No release or discharge of contaminants into the air is proposed from construction of the project or from daily operations that would significantly impact the ambient air quality. Due to the small size of the bridge and the proposed construction methods, emissions during construction are

expected to be short-term in duration and insignificant. Some increases in vehicular emissions will result from the increase in utilization from persons accessing the multi-use trail. The construction of the bridge will have no effect on emissions. No long-term adverse impacts to air quality are anticipated as a result of the proposed action.

(11) Vehicular Traffic.

No increase in vehicular traffic is expected from the proposed pedestrian bridge and trail re-alignment. Motorized vehicle traffic to the trail system and across the bridge will be limited to county personnel performing required maintenance.

(12) Floodplain Impacts.

The proposed bridge and approach trails will be within the limits of the 100-year floodplain. However, no buildings will be located below the 1,085 flood elevation line and no alteration of the flood elevation will occur. The trail approaches and bridge will be similar to the many other pedestrian paths at other properties around the lake that provide access to areas at or near the lake edge.

(13) Noise Impacts.

Noise sources that would result in an adverse impact to the proposed project were not identified. The proposed action will not result in increased noise, other than the short-term noise generated during construction of the bridge.

(14) Aesthetics.

Currently, the park consists of grassed and wooded areas, a paved entrance road and parking areas, boat launch, and picnic and restroom facilities. The Project Area consists of forest land with a partially constructed multi-use pedestrian trail and temporary bridge. The Project Area is a secluded wooded location along a stream valley. The proposed bridge will be constructed of painted steel and wood materials and will blend into the surrounding natural environment. No effects to the aesthetics are anticipated.

(15) Prime and Unique Farmland.

There are no prime farmlands or unique agricultural lands located on the Project Area. Therefore, this project would not require a prime farmland evaluation (United States Department of Agriculture Form 1006) by the Natural Resources Conservation Service.

(16) Socio-Economics.

The Lanier EIS dated November 2003, indicates that the area surrounding Lake Sidney Lanier is rapidly growing in terms of both population and economics. Estimates for the direct and indirect economic effects of Lake Sidney Lanier on Atlanta and the north Georgia area were as high as 5.5 billion dollars a year in one study (Hughes, 2001). The census data shows increasing populations in the surrounding communities and other information indicates that added outdoor recreation opportunities are important to the local community. The project will not change the socio-economics of the area.

(17) Environmental Justice.

Executive Order (EO) 12898 of February 11, 1994 requires addressing, as appropriate, disproportionately high and adverse human health or environmental effects of Federal actions on

minority and low-income populations. No residential properties will be impacted by the proposed project.

(18) Protection of Children.
EO 13045 of April 21, 1997 requires, to the extent permitted by law and mission, identifying and assessing environmental health and safety risks to children posed by the proposed action. Potential health and safety risks would be present during the construction of the bridge. As this is a park area utilized by families and children, equipment and construction areas will be properly fenced or contained and posted during construction, as required.

(19) Hazardous and Toxic Materials.
No hazardous or toxic materials will be utilized for this action. It is not anticipated that this action will result in hazardous or toxic material impacts to the environment.

(20) Cumulative Impacts.
The CEQ defines cumulative effects as "the impact on the environment which results from the incremental impact of the action when added to other past, present, and reasonably foreseeable future actions regardless of what agency or person undertakes such other actions (40 CFR 1408.7)."

The primary impacts of the proposed improvements would include the minor, short-term impacts during construction of the bridge. No future impacts or other foreseeable development of the Project Area is anticipated. At this time, no cumulative environmental impacts from the proposed or future developments at Charleston Park are expected.

7. ANY IRREVERSIBLE OR IRRETRIEVABLE COMMITMENTS WHICH WOULD BE INVOLVED SHOULD THE RECOMMENDED PLAN BE IMPLEMENTED. Any irreversible or irretrievable commitments of resources involved in the proposed action have been considered and are either unanticipated at this time, or have been considered and determined to present minor impacts. The proposed action is reversible, and reclamation of the property could be easily conducted in the future to return the property to natural conditions. Reclamation, if needed, would include removal of the bridge, abandonment of the trail approaches, vegetative restoration, and the placement of possible obstructions or signage to eliminate pedestrian access.

8. ADVERSE ENVIRONMENTAL EFFECTS WHICH CANNOT BE AVOIDED. Any adverse environmental effects which cannot be avoided should the recommended project be implemented are expected to be minor individually and cumulatively. These include very minor soil disturbance from construction activities, and removal of understory vegetation for the trail approaches.

9. THE RELATIONSHIP BETWEEN LOCAL SHORT-TERM USES OF MAN'S ENVIRONMENT AND MAINTENANCE AND ENHANCEMENT OF LONG-TERM PRODUCTIVITY. The proposed project constitutes a short-term use of man's environment, will result in minimal environmental impacts, and is not anticipated to affect long-term

productivity. The proposed use of the Project Site is compatible with surrounding uses and will provide additional outdoor recreation opportunities.

10. REVIEW AND COORDINATION.

During preparation and review of this EA, requests will be sent to the Georgia Department of Natural Resources, Georgia Historic Preservation Division and the U.S. Fish and Wildlife Service to allow the agencies to review the proposed action. The results of the coordination will be outlined in the final EA.

The Draft EA will be made available for review by the interested public and agencies through posting on the USACE Mobile District website (http://www.sam.usace.army.mil/pd/pd1.htm). The Draft EA will be made available for review for a period of 30 days. Any comments will be reviewed and appropriately addressed in the final EA.

11. REFERENCES.

Federal Emergency Management Agency, online Map Service Center, (http://msc.fema.gov/webapp/wcs/stores/servlet/FemaWelcomeView?storeId=10001&catalogId=10001&langId=-1), FEMA Flood Insurance Rate Map Number: 13117C 0160E.

Department of the Army, South Atlantic Division, Corps of Engineers. 2004. Final Environmental Impact Statement. Lake Sidney Lanier, Georgia, Operations and Maintenance.

U.S. Army Corps of Engineers, Mobile District. September 1998. Draft Environmental Impact Statement. Water Allocation Table for the Apalachicola-Chattahoochee Flint (ACF) River Basin, Alabama, Florida, and Georgia.

U.S. Fish and Wildlife Service, Listed Species in Chattahoochee River, Upper North Watershed (HUC8: 03130001), February 2007.

U.S. Department of Agriculture, Soil Conservation Service, online Soil Survey of Forsyth County, Georgia.

U.S. Department of the Interior, U.S. Fish and Wildlife Service, National Wetland Inventory Map, On-Line Wetlands Mapper.

U.S. Geological Survey, 7.5-Minute Series Quadrangle Map, Buford Dam, Georgia, 1964.

Environmental Laboratory. Corps of Engineers Wetlands Delineation Manual, Technical Report Y-87-1, U.S. Army Engineer Waterways Experiment Station, Vicksburg, MS, 1987.

Bridge Design Plans, AMEC Environment & Infrastructure, Inc., dated October 21, 2012.

12. APPENDICES - SUPPORTING DOCUMENTS.

A. Maps and Figures
   1. Figure 1: Lake Recreation Map
   2. Figure 2: Site Location/Street Map
   3. Figure 3: USGS Topographic Map
   4. Figure 4: National Wetland Inventory Map
   5. Figure 5: Soil Survey Map
   6. Figure 6: Floodplain Map
   7. Figure 7: Existing Conditions and Wetland Delineation Map

B. Previous and Existing (Approved) Master Plan Information
   1. Charleston Park Conceptual Master Plan, Executive Summary
   2. Existing (approved) Concept Site Plan, dated October 17, 2007
   3. USACE Memorandum – Master Plan Approval
   4. Previous Master Plan: Recreation Development Concept Diagram (ca. 1987)

C. Site Photographs

D. Proposed Bridge Design Plans (Sheets S-001, S-101, S-501)
   Exhibit A – Bridge Alternatives Plan

E. Agency Consultation (Pending)
   1. Georgia Department of Natural Resources
   2. U.S. Fish and Wildlife Service
   3. Georgia Historic Preservation Division

F. Public Comments (Pending)

APPENDIX A - MAPS AND FIGURES

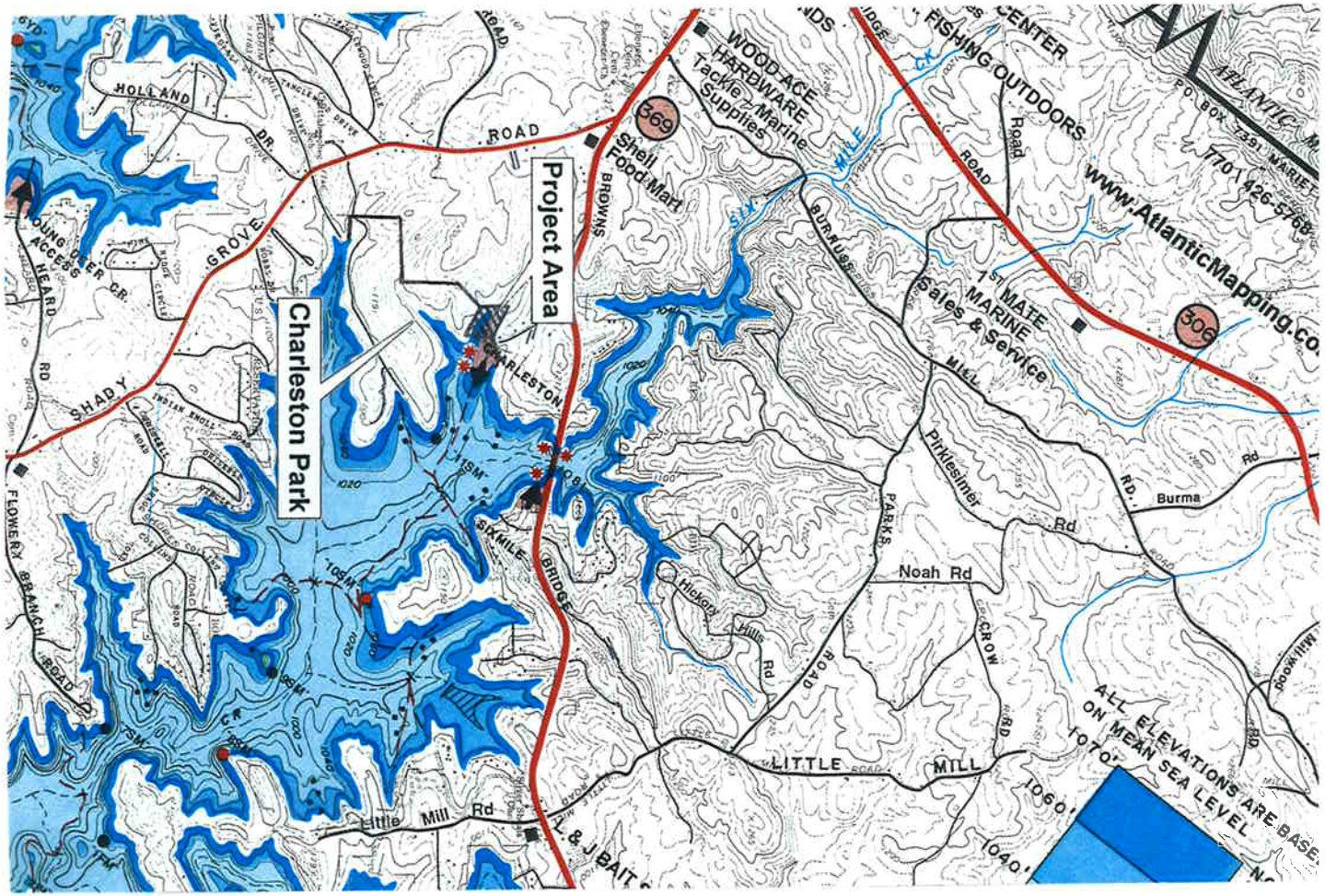

SCALE: 1" = 3,200'	DATE: JULY 19, 2011	PROJECT NO: 2011.2233.01	TITLE: LAKE RECREATION MAP CHARLESTON PARK-PEDESTRIAN BRIDGE
PREPARED: MGA	CHECKED: DK	REVISIONS:	
CLIENT: FORSYTH COUNTY PARKS AND RECREATION			UNITED CONSULTING 625 Holcomb Bridge Road, Norcross, GA 30071 www.unitedconsulting.com

Fig. 1

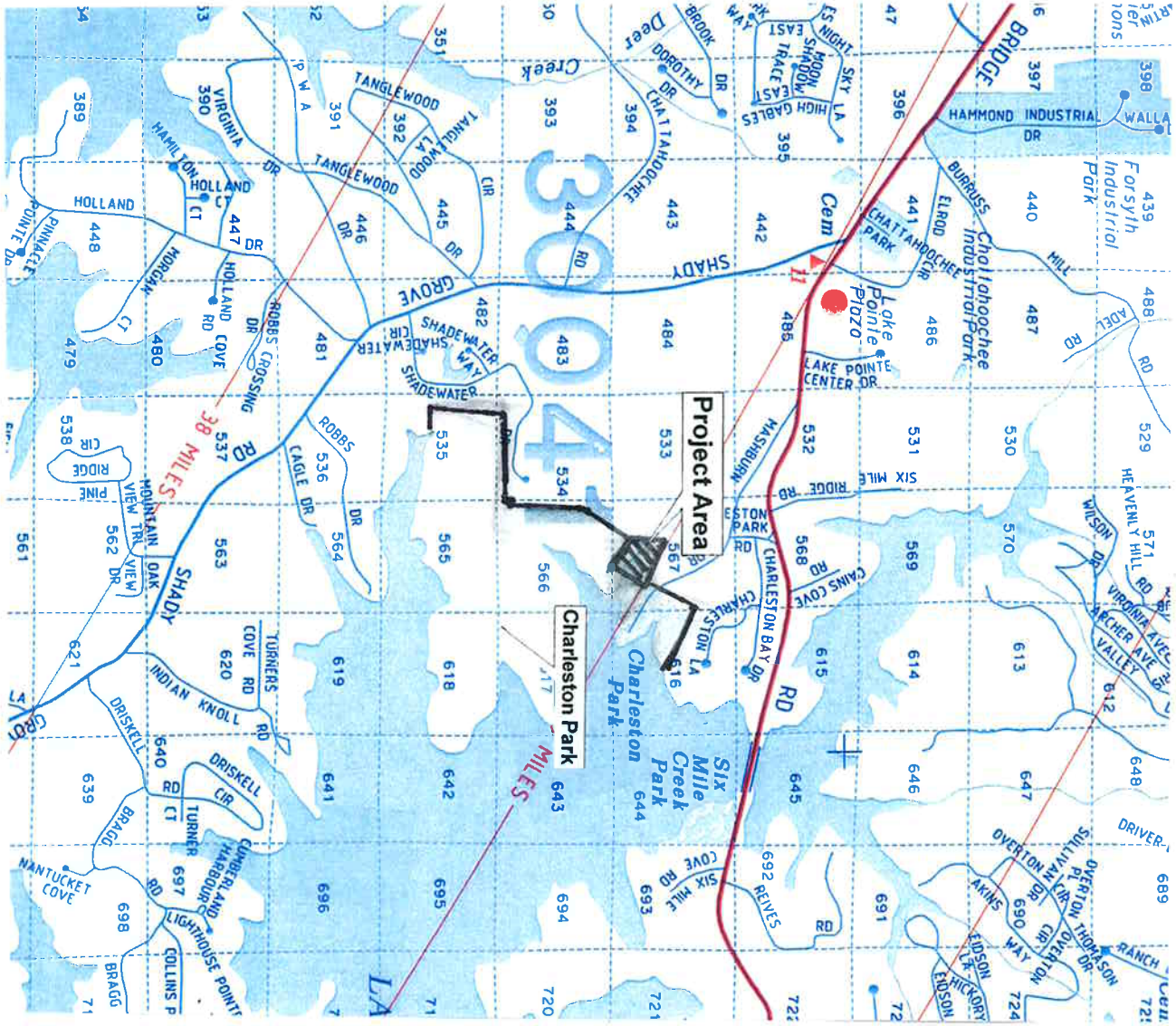

SCALE: 1" = 2,000'	DATE: JULY 19, 2011	PROJECT NO: 2011.2233.01	TITLE: SITE LOCATION/STREET MAP CHARLESTON PARK-PEDESTRIAN BRIDGE
PREPARED: MGA	CHECKED:	REVISIONS:	
CLIENT: FORSYTH COUNTY PARKS AND RECREATION			UNITED CONSULTING 625 Holcomb Bridge Road, Norcross, GA 30071 www.unitedconsulting.com

Fig. 2

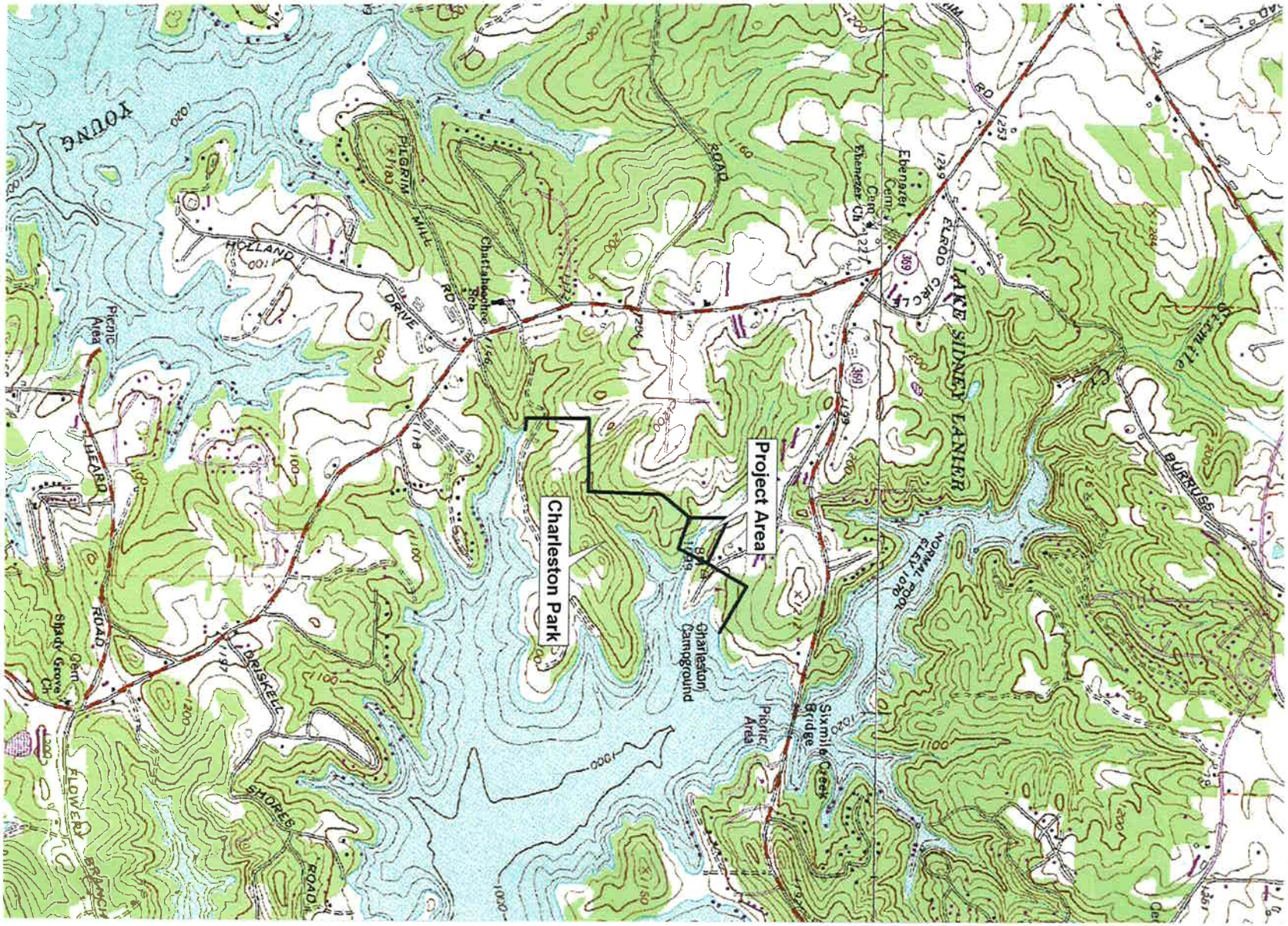

SCALE: 1" = 2,000'	DATE: JULY 19, 2011	PROJECT NO: 2011.2233.01	TITLE: USGS TOPOGRAPHIC MAP CHARLESTON PARK-PEDESTRIAN BRIDGE
PREPARED: MGA	CHECKED: DH	REVISIONS:	
CLIENT: FORSYTH COUNTY PARKS AND RECREATION			UNITED CONSULTING 625 Holcomb Bridge Road, Norcross, GA 30071 www.unitedconsulting.com

Fig. 3

SCALE: AS SHOWN	DATE: JULY 19, 2011	PROJECT NO: 2011.2233.01	TITLE: NATIONAL WETLAND INVENTORY MAP CHARLESTON PARK-PEDESTRIAN BRIDGE
PREPARED: MGA	CHECKED: DH	REVISIONS:	
CLIENT: FORSYTH COUNTY PARKS AND RECREATION			UNITED CONSULTING 625 Holcomb Bridge Road, Norcross, GA 30071 www.unitedconsulting.com

Fig. 4

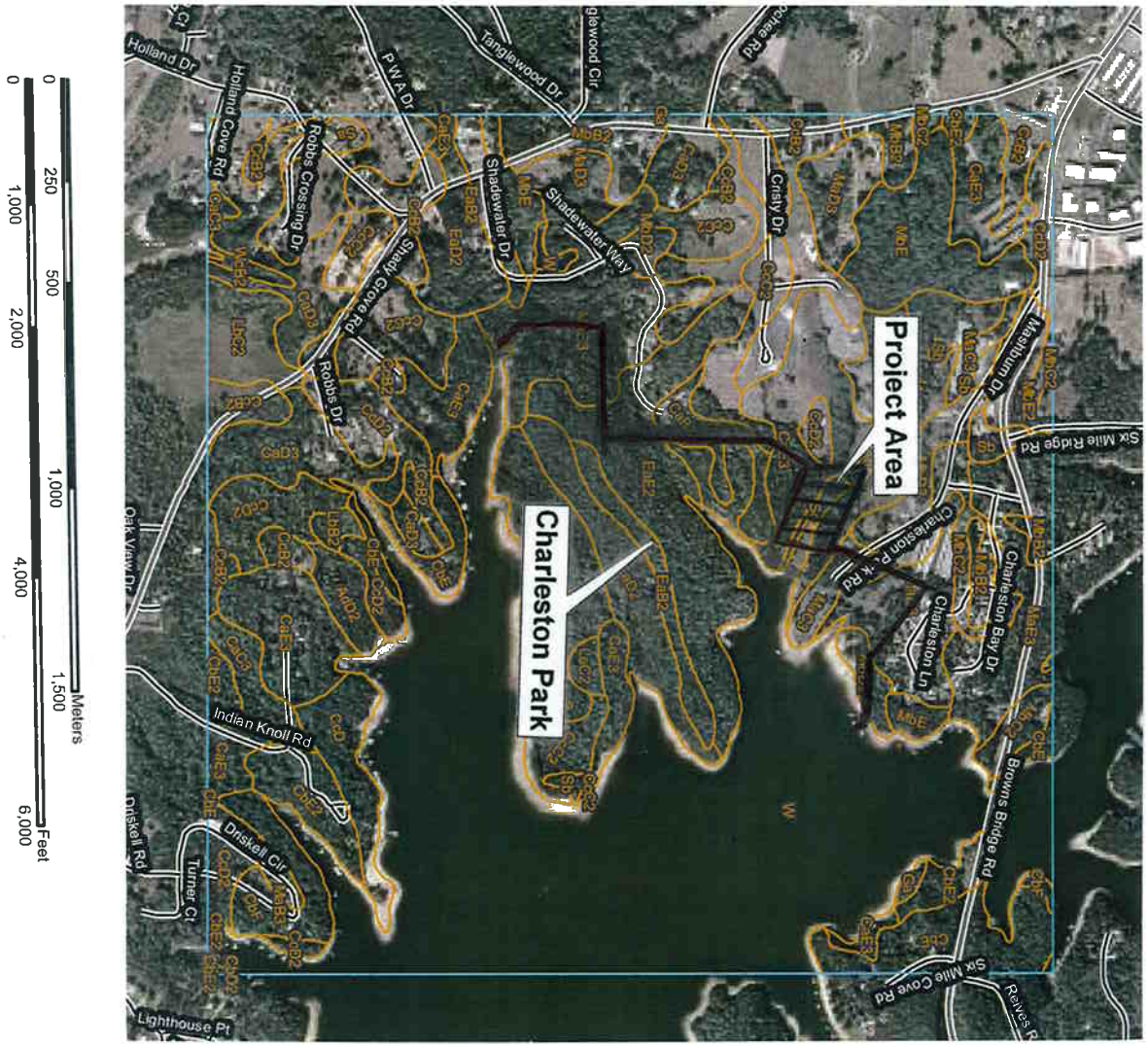

SCALE: AS SHOWN	DATE: JULY 19, 2011	PROJECT NO: 2011.2233.01	TITLE: SOIL SURVEY MAP CHARLESTON PARK-PEDESTRIAN BRIDGE
PREPARED MGA	CHECKED: DIF	REVISIONS:	
CLIENT: FORSYTH COUNTY PARKS AND RECREATION			UNITED CONSULTING 625 Holcomb Bridge Road, Norcross, GA 30071 www.unitedconsulting.com

Fig. 5

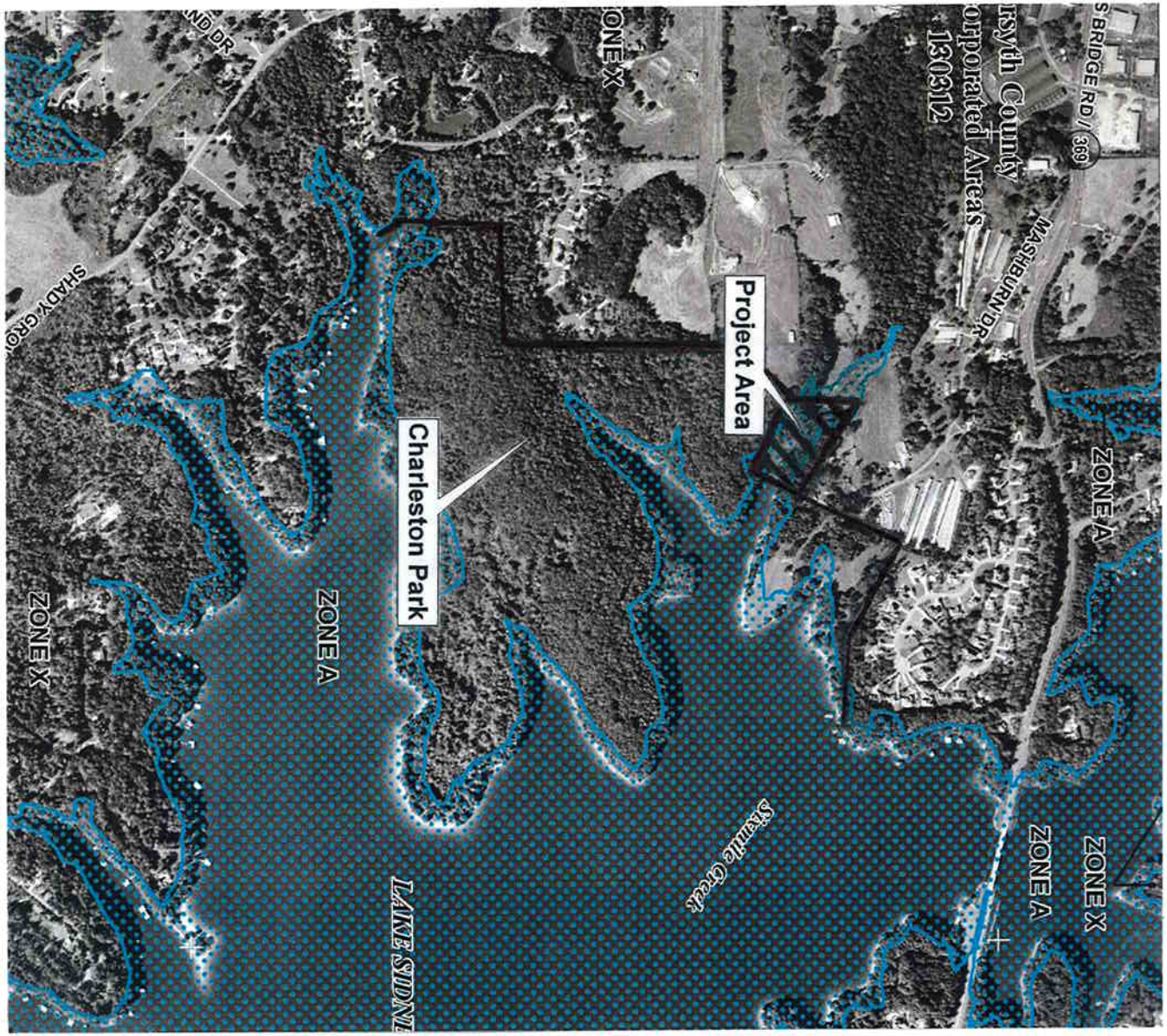

SCALE: 1"=1000'	DATE: JULY 19, 2011	PROJECT NO: 2011.2233.01	TITLE: FLOODPLAIN MAP CHARLESTON PARK-PEDESTRIAN BRIDGE
PREPARED MGA	CHECKED: DH	REVISIONS:	
CLIENT: FORSYTH COUNTY PARKS AND RECREATION			UNITED CONSULTING 625 Holcomb Bridge Road, Norcross, GA 30071 www.unitedconsulting.com

Fig. 6

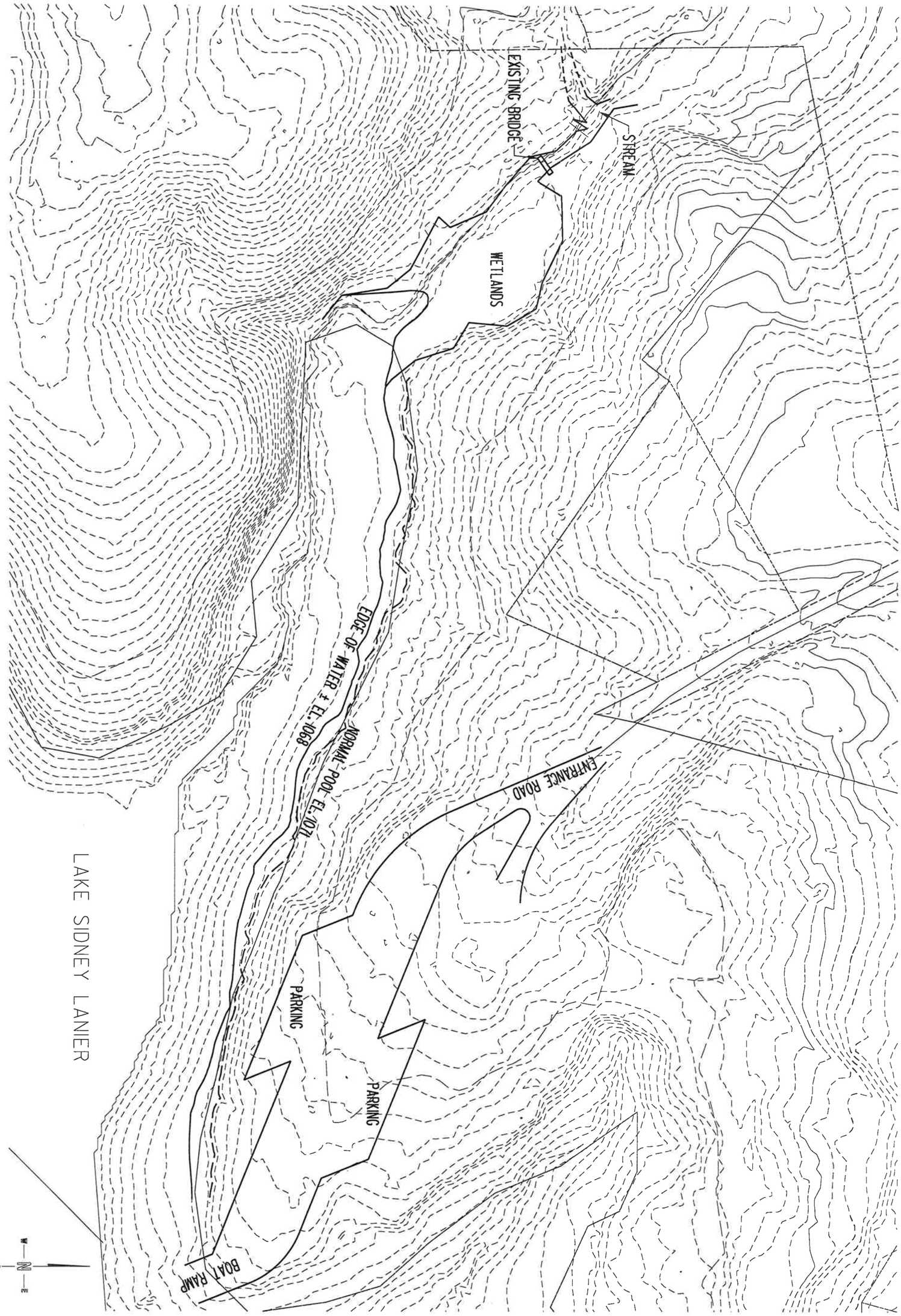

SCALE: 1" = 100'	DATE: 6-30-11	PROJECT NO: 2011.2233.01	TITLE: EXISTING CONDITIONS & WETLAND LOCATION MAP CHARLESTON PARK FORSYTH COUNTY, GEORGIA
PREPARED: VPV	CHECKED: DH	REVISIONS:	
CLIENT: FORSYTH COUNTY PURCHASING DEPARTMENT			We're here for you UNITED CONSULTING 625 Holcomb Bridge Road Norcross, Georgia 30071 770-209-0029 Fax 582-2900 www.unitedconsulting.com Copyright © United Consulting Group, Ltd.

FIG. 7

APPENDIX B – PREVIOUS AND EXISTING (APPROVED) MASTER PLAN INFORMATION

Forsyth County, Georgia
Parks and Recreation Department

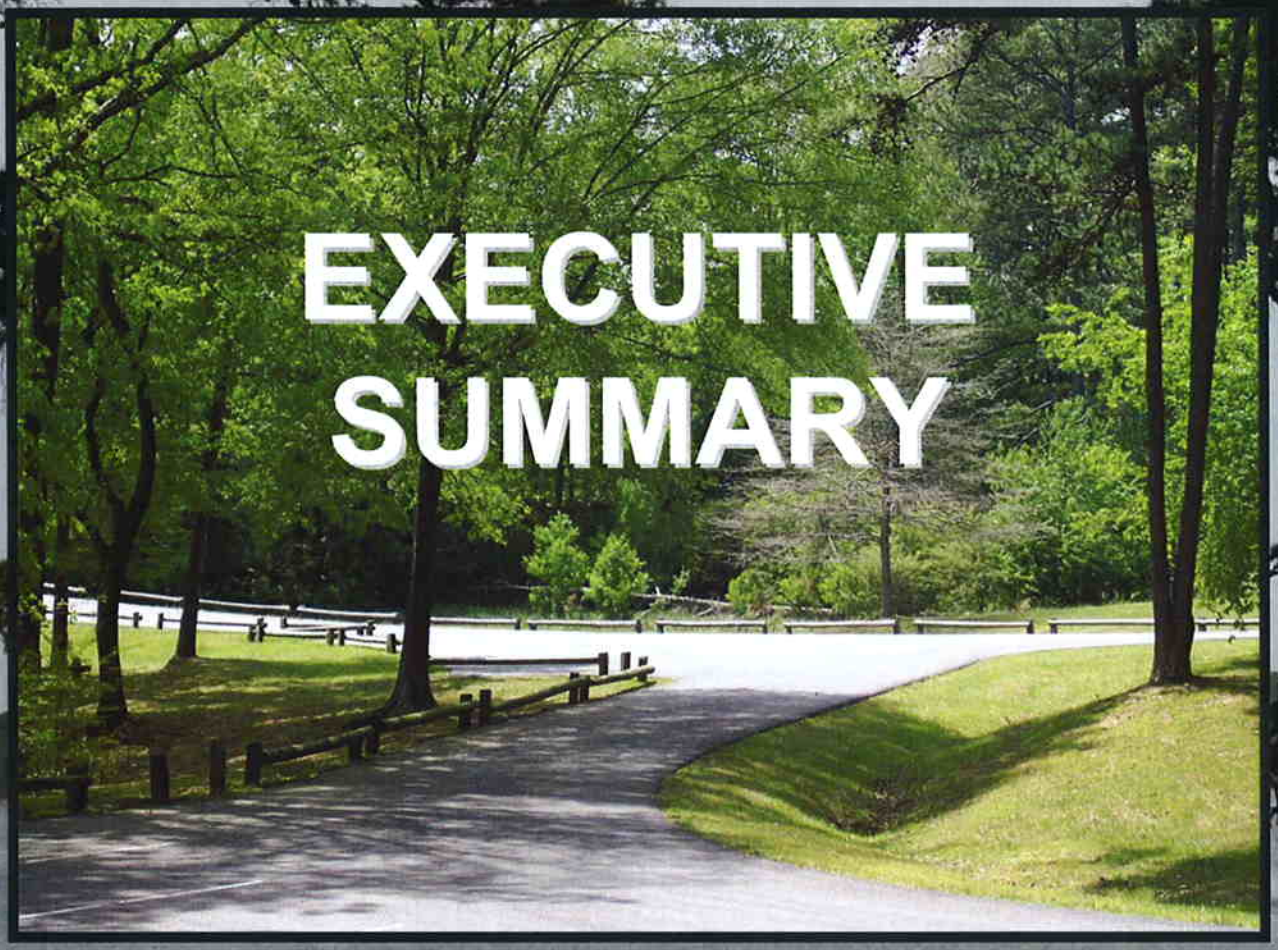

EXECUTIVE SUMMARY

Charleston Park

CONCEPTUAL MASTER PLAN

Executive Summary-Charleston Park
Forsyth County, Georgia
Forsyth County Parks and Recreation Department

CONTENTS:

page 1	**Existing Conditions**
page 2	**Proposed Master Plan**
page 3	**Conceptual Site Plan**
page 4	**Opinion of Probable Construction Cost**

Executive Summary-Charleston Park
Forsyth County, Georgia
Forsyth County Parks and Recreation Department

Existing Conditions

Charleston Park is a 154-acre day use park on Lake Sidney Lanier. The park currently contains the following amenities: restroom facility, 64 parking spaces, lake-side picnic tables with barbeque grills, 49 boat-trailer parking spaces, a courtesy dock and a three-lane boat ramp. Of the total Charleston Park acreage, only fourteen acres are currently occupied due to the inaccessibility of the remaining land. Overall, Charleston Park's existing amenities are in good condition. The boat ramp has been expanded and currently has an uneven but functional surface. The restroom building is a concrete block structure in good condition. Vehicular parking has been recently resurfaced.

The majority of Charleston Park's vegetation is mature stands of hardwoods and pines with moderate undergrowth. The active areas adjacent to the boat trailer parking, vehicular parking, and picnic areas contain numerous tall pines in open, grassed areas.

Executive Summary-Charleston Park
Forsyth County, Georgia
Forsyth County Parks and Recreation Department

Proposed Master Plan

Forsyth County has entered into a lease agreement with the US Army Corps of Engineers to assume management of Charleston Park. Of the total Charleston Park acreage, only fourteen acres are currently occupied due to the

inaccessibility of the remaining land. The passive recreation Master Plan proposes over five miles of multi-use trails with intermittent shade pavilions. A ten-foot-wide pedestrian/light vehicle bridge is proposed to provide access to the land-locked peninsula. Also proposed is a future home for the Water Sports Section of Forsyth County's Outdoor Program. This consists of a canoe/kayak venue and expansion facilities capable of hosting both land and water-based community events. The master plan has been presented at a public information meeting to the US Army Corps of Engineers. *See Charleston Park Conceptual Site Plan, page 3.*

* Public Comments?

Forsyth County
Parks & Recreation
Department

Charleston Park

Conceptual Site Plan

October 17, 2007

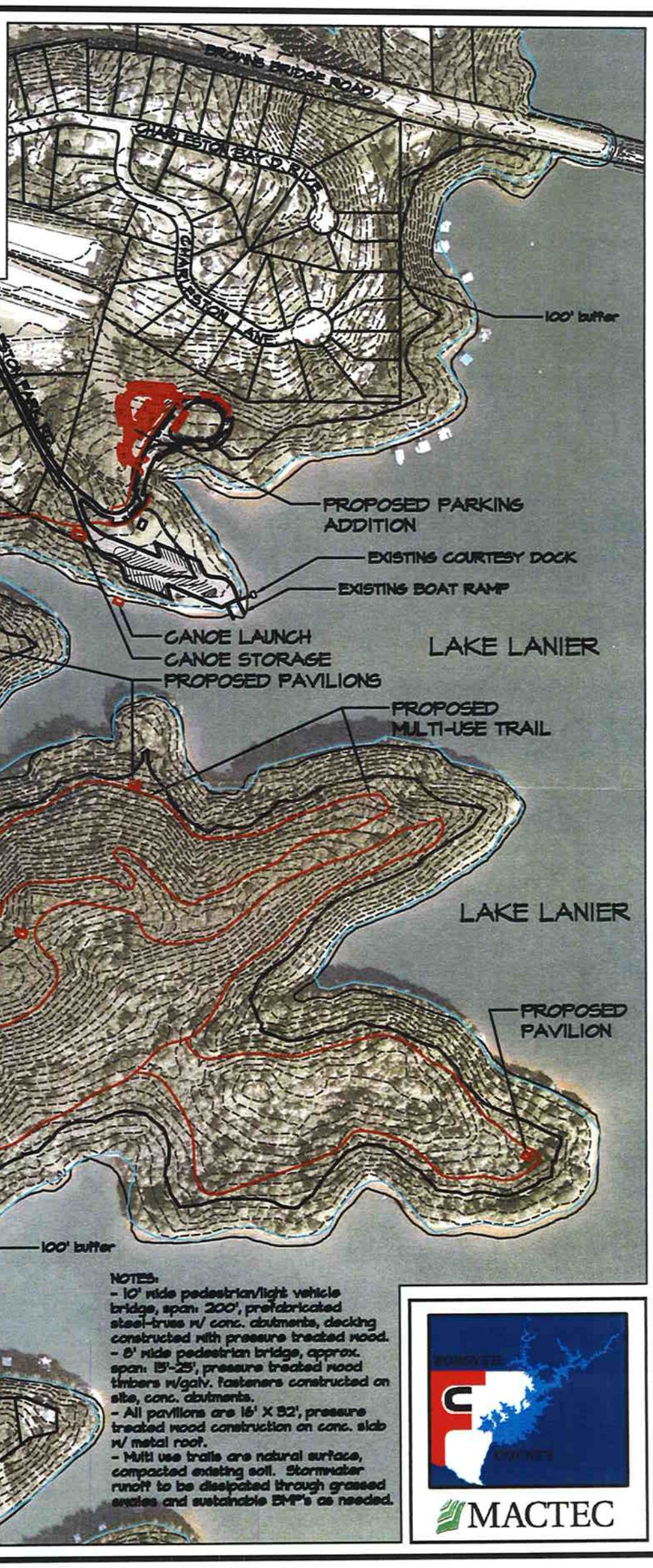

NOTES:
- 10' wide pedestrian/light vehicle bridge, span: 200', prefabricated steel-truss w/ conc. abutments, decking constructed with pressure treated wood.
- 8' wide pedestrian bridge, approx. span: 15'-25', pressure treated wood timbers w/galv. fasteners constructed on site, conc. abutments.
- All pavilions are 16' X 32', pressure treated wood construction on conc. slab w/ metal roof.
- Multi use trails are natural surface, compacted existing soil. Stormwater runoff to be dissipated through grassed swales and sustainable BMP's as needed.

MACTEC

CESAM-OP-M

12 DEC 2007

MEMORANDUM FOR CHIEF, OPERATIONS DIVISION

SUBJECT: Master Plan Approval, Charleston Park, Lake Lanier – FOR DECISION

1. ISSUE. The Forsyth County Georgia Parks and Recreation Department submitted a master development plan for future development and operation of Charleston Park, on Lake Sidney Lanier.

2. RECOMMENDATION. The attached master plan for Charleston Park be stamped and signed approved.

APPROVED_____ SEE ME _____ OTHER _____

3. BACKGROUND AND DISCUSSION. The PDT has reviewed the master development plan and consider the proposed consistent with Corps policies, NEPA requirements and DR 1110-1-3.

4. COORDINATION.

CESAM-OC	Concur/~~Nonconcur~~	DATE 12/12/07
CESAM-RE-C	Concur/~~Nonconcur~~	DATE 12/13/7
CESAM-PD-EI	Concur/~~Nonconcur~~	DATE 12/13/07
CESAM-OP-TR	Concur/~~Nonconcur~~	DATE 12/14/07
CESAM-OP-M	Concur/~~Nonconcur~~	DATE 12/14/07

PATRICIA A. FLANAGAN, P.E.
Chief, Management Support Branch

Encl

General Support Facilities (B)

Facility	Existing (E) & Programmed	Future (F)
Parking (total spaces)	A-115 B-75	
Hiking Trail (miles)		
Playground	A-1	
Amphitheatre		
Mooring Area (spaces)		
R.V. Sanitary Disposal Station		B-1
Restroom	A-1	B-5
Washhouse/Bathhouse		B-3

Overnight Use - Charleston Cove Campground (B) Area #3

Facility	Existing (E) & Programmed	Future (F)
R.V./Trailer Campground -Sites -Acres		309
Tent Campground -Sites -Acres		55
Primitive Campground -Sites -Acres		
Group Campground -Sites -Acres		
Swimming Beach -Beach -Parking Spaces		1 35
Launch Ramp -Acres -Parking Spaces -Launching Lanes		

Circulation & Buffer

Symbol		Description
		Buffer
Existing	Future	
		1-Way Road
		2-Way Road
		Trail
		1080 Contour Line

Day Use - Charleston Access Point (A)

Facility	Existing (E) & Programmed	Future (F)
Picnic Area -Sites -Acres	11	37
Swimming Beach -Beach Acres -Parking Spaces		
Launch Ramp -Acres -Parking Spaces -Launching Lanes	50 3	

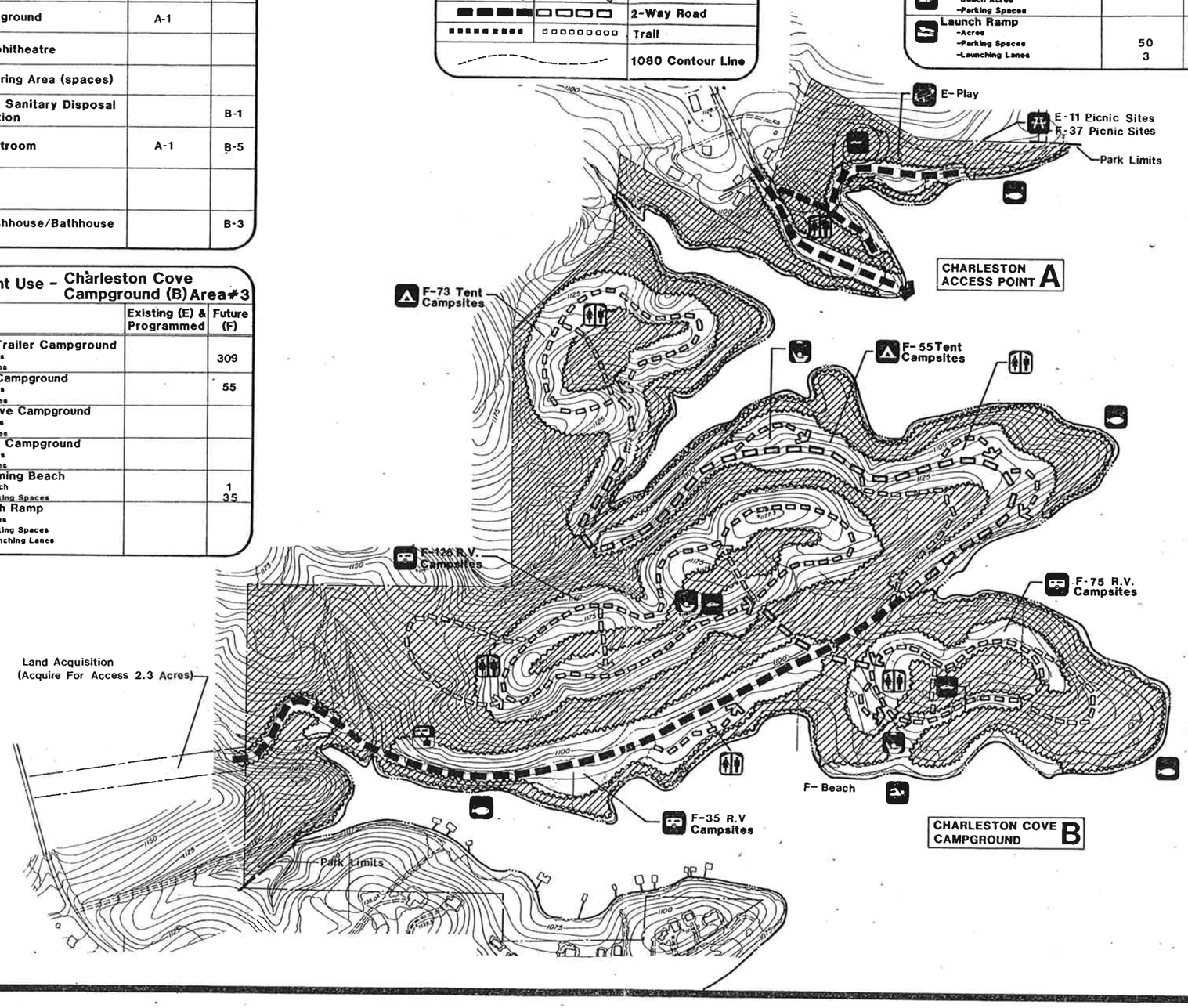

CHARLESTON ACCESS
CHARLESTON COVE C.G.

Recreation Development
Concept Diagram

LEGEND

- R. V. Campground
- Tent/Primitive Campground
- Group Campground
- Picnic Area
- Nature Area
- Swimming Beach
- Launch Ramp
- Amphitheatre
- Playground
- Restroom Facilities
- Washhouse/ Bathhouse
- Pavillion
- R.V. Sanitary Disposal Sta.
- Parking
- Mooring Area
- Fishing
- Hiking Trail

E- Existing
F- Future

UPDATING OF
THE MASTER PLAN
LAKE SIDNEY LANIER
CHATTAHOOCHEE RIVER,
GEORGIA

U. S. ARMY ENGINEER DISTRICT, MOBILE
CORPS OF ENGINEERS
MOBILE, ALABAMA

PLATE 65A

0 100 200 400 800

NORTH

APPENDIX C - SITE PHOTOGRAPHS

Charleston Park – Pedestrian Bridge

Photograph 1: Existing entrance to Charleston Park.

Photograph 2: Temporary bridge across stream for multi-use trail.

Photograph 3: View of stream at proposed bridge location (Alternative 2), looking generally south to north.

Photograph 4: View of the stream at the proposed bridge location, looking upstream.

Photograph 5: View of the stream at the proposed bridge location, looking downstream.

Photograph 6: View of the stream at the proposed bridge location, looking south from the north side of the stream.

Photograph 7: View of wetland area located near existing bridge.

Photograph 8: Scrub-shrub wetland area at location of the previously approved bridge (Alternative 1).

APPENDIX D – BRIDGE DESIGN PLANS AND ALTERNATIVES PLAN

1. GENERAL

A. ALL CONSTRUCTION SHALL CONFORM TO IBC 2009 WITH STATE OF GEORGIA AMENDMENTS. REFERENCE TO OTHER STANDARD SPECIFICATIONS OR CODES SHALL MEAN THE LATEST STANDARD OR CODE ADOPTED AND PUBLISHED.

B. ALL BRIDGE CONSTRUCTION SHALL CONFORM TO AMERICAN ASSOCIATION OF STATE HIGHWAY AND TRANSPORTATION OFFICIALS (AASHTO) LRFD BRIDGE CONSTRUCTION SPECIFICATIONS.

C. VERIFY ALL EXISTING CONDITIONS, DIMENSIONS AND ELEVATIONS BEFORE STARTING WORK. NOTIFY THE STRUCTURAL ENGINEER IN WRITING OF CONDITIONS ENCOUNTERED IN THE FIELD CONTRADICTORY TO THOSE SHOWN ON THE STRUCTURAL CONTRACT DOCUMENTS.

D. THE CONTRACTOR IS SOLELY RESPONSIBLE FOR THE DESIGN, ADEQUACY, AND SAFETY OF ERECTION BRACING, SHORING, TEMPORARY SUPPORTS, ETC.

E. COORDINATE STRUCTURAL CONTRACT DOCUMENTS WITH LANDSCAPE ARCHITECTURAL AND CIVIL CONTRACT DOCUMENTS. NOTIFY STRUCTURAL ENGINEER OF ANY CONFLICT AND/OR OMISSION.

F. SUBMIT SUBMITTALS AND/OR SHOP DRAWINGS FOR CONSTRUCTION OF ALL APPLICABLE ITEMS INDICATED IN THE PROJECT MANUAL. APPROVED SHOP DRAWINGS SHALL BE AVAILABLE AT THE JOB SITE AT ALL TIMES.

G. REVIEW OF SUBMITTALS AND/OR SHOP DRAWINGS BY THE STRUCTURAL ENGINEER DOES NOT RELIEVE THE CONTRACTOR OF THE RESPONSIBILITY TO REVIEW AND CHECK SHOP DRAWINGS BEFORE SUBMITTAL TO THE STRUCTURAL ENGINEER. THE CONTRACTOR REMAINS SOLELY RESPONSIBLE FOR ERRORS AND OMISSIONS ASSOCIATED WITH THE PREPARATION OF SHOP DRAWINGS AS THEY PERTAIN TO MEMBER SIZES, DETAILS, AND DIMENSIONS SPECIFIED IN THE CONTRACT DOCUMENTS. CONTRACTOR IS ALSO RESPONSIBLE FOR MEANS, METHODS, TECHNIQUES, SEQUENCES, AND PROCEDURES OF CONSTRUCTION.

H. SYSTEM COMPONENTS REQUIRING SPECIAL INSPECTION ARE INDICATED IN THE PROJECT MANUAL.

2. DESIGN LOADS

A. PEDESTRIAN BRIDGES SHALL BE DESIGNED IN ACCORDANCE WITH AASHTO LRFD GUIDE SPECIFICATIONS FOR THE DESIGN OF PEDESTRIAN BRIDGES (AASHTO PED).

B. GRAVITY LOADS:
a. DEAD LOADING
DC = SELF WEIGHT OF STRUCTURE
b. HORIZONTAL EARTH PRESSURE — EH = 44 PCF/FT
ACTIVE EARTH PRESSURE
c. VERTICAL PRESSURE FROM EARTH — EV = 120 PCF
d. EARTH SURCHARGE — ES = 2 FEET
e. PEDESTRIAN LIVE LOAD (PL) — PL = 90.0 PSF
f. VEHICLE LOAD — LL = MAINTENANCE
VEHICLE LOAD (AASHTO H10 LOADING)

C. WIND LOAD
WIND PRESSURE SHALL BE CALCULATED IN ACCORDANCE WITH THE REQUIREMENTS OF AASHTO PED:
a. HORIZONTAL WIND PRESSURE (WS)

BASIC WIND SPEED	V = 90 MPH
IMPORTANCE FACTOR	Ir = 1.15
GUST EFFECT FACTOR	G = 1.14
WIND DRAG COEFFICIENT	Cd = 2.0
VELOCITY PRESSURE EXPOSURE	Kz = 0.98
WIND PRESSURE	Pz=50 PSF

b. VERTICAL UPLIFT
LINE WIND LOAD PED 3.4 APPLIED AT THE WINDWARD QUARTER POINT OF THE DECK WIDTH
WIND PRESSURE PZ =20 PSF TIMES WIDTH OF THE DECK

3. FOUNDATIONS

A. THE DESIGN OF FOUNDATIONS AND RETAINING WALLS IS BASED ON THE CRITERIA ESTABLISHED IN THE GEOTECHNICAL REPORTS BY UNITED CONSULTING, DATED MAY 7, 2012. HELICAL PILE FOUNDATION SHALL REACH A MINIMUM DEPTH OF 18 FEET AS SUGGESTED FROM THE GEOTECHNICAL REPORT. ACTUAL DEPTH OF FOUNDATION SHALL BE VERIFIED IN THE FIELD BY A GEOTECHNICAL ENGINEER, LISCENCED IN THE STATE OF GEORGIA, AT THE TIME OF PILE INSTALLATION.

B. THE EVALUATION OF THE CONDITION AND/OR ADEQUACY OF ALL SUBGRADES, FILLS AND BACKFILLS SHALL BE PERFORMED UNDER THE DIRECTION OF A GEOTECHNICAL ENGINEER REGISTERED IN THE STATE OF GEORGIA. ALL SUBGRADE WORK SHALL BE PERFORMED IN ACCORDANCE WITH THE PROJECT SPECIFICATIONS AND THE GEOTECHNICAL REPORTS BEFORE PLACEMENT OF FOUNDATIONS, FOOTINGS, SLABS, WALLS, FILLS, BACKFILLS, ETC.

C. WHERE RETAINED SOILS ARE NOT COVERED BY CONCRETE OR PAVEMENT AND ARE EXPOSED TO WEATHER, THE TOPSOIL REQUIREMENTS OF BACKFILL SHALL BE COORDINATED WITH LANDSCAPE DRAWINGS.

D. DRAINAGE SYSTEM BEHIND CONCRETE WALLS SHALL BE A SUBSURFACE BLANKET DRAIN UNDERNEATH AND SURROUNDING THE PERIMETER OF THE STRUCTURE WITH A MINIMUM DEPTH OF 12 INCHES OF #57 STONE. FURTHER DETAILS SHALL BE IN ACCORDANCE WITH THE RECOMMENDATIONS IN THE GEOTECHNICAL REPORT AND SET FORTH IN THE PROJECT MANUAL.

E. GROUND WATER SHALL BE KEPT AT LEAST 3 FEET BELOW THE DEEPEST FOUNDATION BEARING ELEVATION DURING CONSTRUCTION. THE CONTRACTOR SHALL BE SOLELY RESPONSIBLE FOR DEWATERING FOR ALL MEASURES NECESSARY.

F. AFTER STRIPPING ALL PAVEMENTS, VEGETATION, ROOTMAT, TOPSOIL, AND ANY OTHER SOFT OR UNSUITABLE MATERIAL FROM THE CONSTRUCTION AREA, AND PRIOR TO FILL PLACEMENT, THE STRIPPED SURFACE SHOULD BE EVALUATED UNDER THE DIRECTION OF A GEOTECHNICAL ENGINEER LICENSED IN THE STATE OF GEORGIA.

G. ALL FILL OPERATIONS SHOULD BE OBSERVED, ON A FULL-TIME BASIS BY A QUALIFIED SOIL TECHNICIAN TO DETERMINE THAT MINIMUM COMPACTION REQUIREMENTS ARE BEING MET.

H. FILL MATERIALS SHOULD BE PLACED IN LIFTS NOT EXCEEDING 8" IN LOOSE THICKNESS AND MOISTURE CONDITIONED TO WITHIN ±3% OF THE OPTIMUM MOISTURE CONTENT TO FACILITATE PROPER COMPACTION. CONTROLLED FILL SOILS SHOULD BE COMPACTED TO MINIMUM OF 95% OF THE MAXIMUM DRY DENSITY OBTAINED IN ACCORDANCE WITH ASTM SPECIFICATION D-698, STANDARD PROCTOR METHOD.

4. REINFORCED CONCRETE

A. ALL CONCRETE WORK SHALL CONFORM TO ACI 301, SPECIFICATIONS FOR STRUCTURAL CONCRETE OR AASHTO LRFD BRIDGE CONSTRUCTION SPECIFICATIONS, AS APPLICABLE.

B. ALL REINFORCING LAP SPLICES IN CONCRETE SHALL CONFORM TO ACI 318-05 PROVIDE CONTINUOUS REINFORCEMENT WHEREVER POSSIBLE; SPLICE ONLY AS SHOWN OR APPROVED; STAGGER SPLICES WHERE POSSIBLE; USE TENSION SPLICE (CLASS "B") UNLESS NOTED OTHERWISE. DOWELS SHALL MATCH THE SIZE AND SPACING OF THE SPECIFIED REINFORCEMENT AND SHALL BE LAPPED WITH TENSION SPLICES (CLASS "B") UNLESS NOTED OTHERWISE.

C. UNLESS NOTED OTHERWISE, ALL CONCRETE SHALL BE NORMAL WEIGHT AND HAVE THE FOLLOWING MINIMUM 28 DAY STRENGTHS:

WALLS: . . . . . .4000 PSI (AIR-ENTRAINED, AASHTO CLASS A(AE))
RETAINING WALLS: . . . . . .4000 PSI (AIR-ENTRAINED, AASHTO CLASS A(AE))
ABUTMENTS: . . . . . .4000 PSI (AIR-ENTRAINED, AASHTO CLASS A(AE))
GROUT . . . . . .4000 PSI (AIR-ENTRAINED, AASHTO CLASS A(AE))

D. THE PROPOSED MATERIALS AND MIX DESIGN SHALL BE FULLY DOCUMENTED AND REVIEWED BY THE OWNER'S TESTING LABORATORY. RESPONSIBILITY FOR OBTAINING THE REQUIRED DESIGN STRENGTH IS THE CONTRACTOR'S.

E. USE OF CALCIUM CHLORIDE, CHLORIDE IONS, OR OTHER SALTS IN CONCRETE IS NOT PERMITTED.

F. HORIZONTAL CONSTRUCTION JOINTS ARE PERMITTED ONLY WHERE INDICATED. THE LOCATION OF VERTICAL CONSTRUCTION JOINTS SHALL BE APPROVED BY THE STRUCTURAL ENGINEER. CONSTRUCTION JOINTS SHALL BE THOROUGHLY ROUGHENED BY MECHANICAL MEANS, AND CLEANED.

G. REINFORCING STEEL SHALL CONFORM TO ASTM A615, GRADE 60 UNLESS NOTED OTHERWISE.

H. WHEN PLACING CONCRETE UNDER HOT OR COLD WEATHER CONDITIONS COMPLY WITH THE LATEST EDITIONS OF ACI 305R: "HOT WEATHER CONCRETING" OR ACI 306R: "COLD WEATHER CONCRETING".

I. TIE ALL REINFORCING STEEL AND EMBEDMENTS SECURELY IN PLACE PRIOR TO PLACING CONCRETE. PROVIDE SUFFICIENT SUPPORTS TO MAINTAIN THE POSITION OF REINFORCEMENT WITHIN SPECIFIED TOLERANCES DURING ALL CONSTRUCTION ACTIVITIES. "STICKING" DOWELS INTO WET CONCRETE IS NOT PERMITTED.

J. REINFORCING STEEL SHALL HAVE THE FOLLOWING CONCRETE COVER UNLESS NOTED OTHERWISE: (NON-PRESTRESSED CONCRETE)

a. CONCRETE CAST AGAINST AND PERMANENTLY EXPOSED TO EARTH . . . . . 3"
b. CONCRETE EXPOSED TO EARTH, LIQUID, WEATHER, OR CAST AGAINST A CONCRETE WORK MAT:
SLABS AND JOINTS . . . . . 2"
BEAMS AND COLUMNS: STIRRUPS, SPIRALS, AND TIES . . . . . 2"
PRIMARY REINFORCEMENT. . . . . 2-1/2"
WALLS . . . . . 2"
FOOTINGS: FORMED SURFACES . . . . . 2"
TOP OF FOOTINGS . . . . . 2"

K. DO NOT WELD OR TACK WELD REINFORCING BARS.

L. ALL REINFORCING STEEL PLACEMENT SHALL BE REVIEWED IN ACCORDANCE WITH ACI 318 SECTION 1.3 BY A REGISTERED STRUCTURAL ENGINEER, OR BY A REPRESENTATIVE RESPONSIBLE TO HIM.

M. CHAMFER OR ROUND ALL EXPOSED CORNERS MINIMUM 3/4", UNLESS NOTED OTHERWISE.

N. DO NOT PLACE PIPES OR DUCTS EXCEEDING ONE-THIRD THE SLAB OR WALL THICKNESS WITHIN THE SLAB OR WALL UNLESS SPECIFICALLY SHOWN AND DETAILED ON THE STRUCTURAL DRAWINGS.

O. UNLESS NOTED OTHERWISE, PLACE VERTICAL CONTROL JOINTS IN RETAINING WALLS AT 20'-0" O.C. (MAX), 3/4" DEEP, V-CHAMFERED ON BOTH FACES. CONSTRUCTION JOINTS SHALL FALL ON CONTROL JOINTS AND SHALL BE KEYED. PROVIDE WATER STOPS.

P. DETAIL ALL CONCRETE WALLS AND BEAMS ON THE SHOP DRAWINGS IN ELEVATION UNLESS SPECIFICALLY APPROVED OTHERWISE.

5. STRUCTURAL STEEL

A. STRUCTURAL STEEL SHALL BE DETAILED, FABRICATED AND ERECTED ACCORDING TO AISC 360-05 "SPECIFICATION FOR STRUCTURAL STEEL BUILDINGS" DATED MARCH 9, 2005 (13TH EDITION) OR AASHTO LRFD BRIDGE CONSTRUCTION SPECIFICATIONS, AS APPLICABLE .

B. SUBMIT SHOP DRAWINGS PREPARED IN ACCORDANCE WITH AISC MANUAL "DETAILING FOR STEEL CONSTRUCTION", 1983. DO NOT BEGIN FABRICATION UNTIL SHOP DRAWINGS ARE COMPLETED AND REVIEWED.

C. STRUCTURAL STEEL FOR BRIDGE STRUCTURES SHALL CONFORM TO ASTM A709 GRADE 50.

D. STRUCTURAL STEEL SHALL CONFORM TO ASTM A992, GR 50 AS NOTED ON THE DRAWINGS. ANGLES, CHANNELS & MISC. PLATES SHALL CONFORM TO ASTM A36.

E. RECTANGULAR AND SQUARE HOLLOW STRUCTURAL SECTIONS SHALL CONFORM TO ASTM A500, GRADE B, UNLESS NOTED OTHERWISE.

F. ROUND HOLLOW STRUCTURAL SECTIONS (HSS) SHALL CONFORM TO ASTM A500, GRADE B, UNLESS NOTED OTHERWISE.

G. BOLTS SHALL CONFORM TO THE FOLLOWING SPECIFICATIONS:
a. BRIDGE STEEL: ASTM A490, MINIMUM 7/8" DIAMETER, SLIP CRITICAL.
b. ALL OTHER: ASTM A325, MINIMUM 3/4" DIAMETER, TYPE N, U.N.O.

H. ANCHOR RODS SHALL CONFORM TO ASTM F1554 Grade 55, UNLESS NOTED OTHERWISE.

I. USE PREQUALIFIED WELDED JOINTS AS PER ANSI/AWS D1.1 "STRUCTURAL WELDING CODE-STEEL". USE ONLY CERTIFIED WELDERS, MINIMUM E70XX ELECTRODES UNLESS NOTED OTHERWISE.

J. DO NOT USE GAS CUTTING TORCHES FOR CORRECTING FABRICATION ERRORS IN THE STRUCTURAL FRAMING.

K. WHEN SPECIFICALLY NOT DETAILED ON THE DESIGN DRAWINGS PROVIDE THE FOLLOWING BEAM CONNECTIONS:

a. WHERE BEAM REACTIONS ARE SHOWN, CONNECTIONS SHALL DEVELOP THE REACTION GIVEN.

b. WHEN BEAM REACTIONS ARE NOT SHOWN, CONNECTIONS SHALL BE DESIGNED TO SUPPORT ONE HALF THE TOTAL UNIFORM LOAD CAPACITY SHOWN IN THE ALLOWABLE UNIFORM LOAD TABLES, PART 2 OF THE AISC MANUAL, FOR THE GIVEN BEAM, SPAN, AND GRADE OF STEEL SPECIFIED.

c. WHERE REACTIONS ARE SUBJECT TO ECCENTRICITY, SUCH ECCENTRICITY SHALL BE TAKEN INTO ACCOUNT.

L. PAINT STRUCTURAL STEEL IN ACCORDANCE WITH THE PROJECT SPECIFICATIONS. DO NOT PAINT STEEL SURFACES TO BE ENCASED IN CONCRETE, CONNECTIONS DESIGNATED AS SLIP CRITICAL, OR TO BE WELDED.

M. BOLTED CONNECTIONS SHALL BE ASSEMBLED AND INSPECTED ACCORDING TO "SPECIFICATIONS FOR STRUCTURAL JOINTS USING ASTM A325 OR ASTM A490 BOLTS".

amec
AMEC
ENVIRONMENT & INFRASTRUCTURE, INC.
1075 BIG SHANTY ROAD NW, SUITE 100
KENNESAW, GA 30144
TEL: (770) 421-3400

No. 18977 PROFESSIONAL ENGINEER MICHAEL BRYAN

PRELIMINARY NOT FOR CONSTRUCTION

PROJECT:
IMPLEMENTATION DRAWINGS
CHARLESTON PARK DAY USE AREA

FORSYTH COUNTY
BOARD OF COMMISSIONERS
110 EAST MAIN STREET
CUMMING, GEORGIA 30040

AMEC PROJECT No: 6151.12.0136

REVISIONS

NO.	DATE	BY	APPROVED

DESIGNED BY:	R. DILL
DRAWN BY:	R. DILL
CHECKED BY:	L. COLE
APPROVED BY:	T. HILL
DATE:	21 OCT 2012

SHEET TITLE:
STRUCTURAL NOTES

SHEET NUMBER:	REV. #
S-001	----
SHEET OF SHEETS	

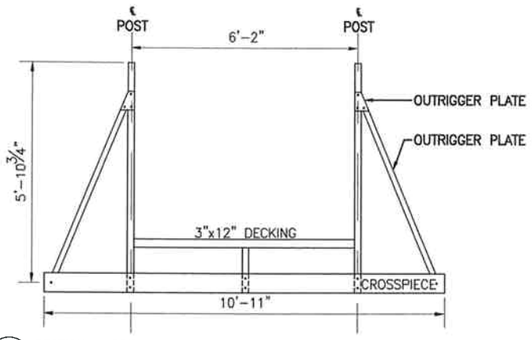

3 / S-201 SECTION – BRIDGE AT OUTRIGGER LOCATION
SCALE: 1/2" = 1'-0"

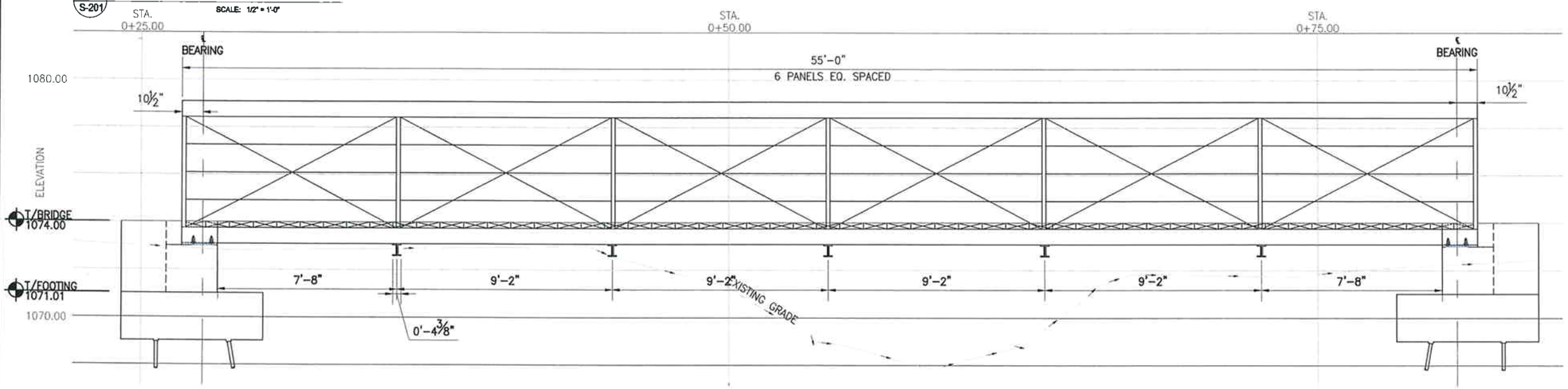

2 / S-201 ELEVATION – PROPOSED BRIDGE LAYOUT
SCALE: 1" = 30'-0"

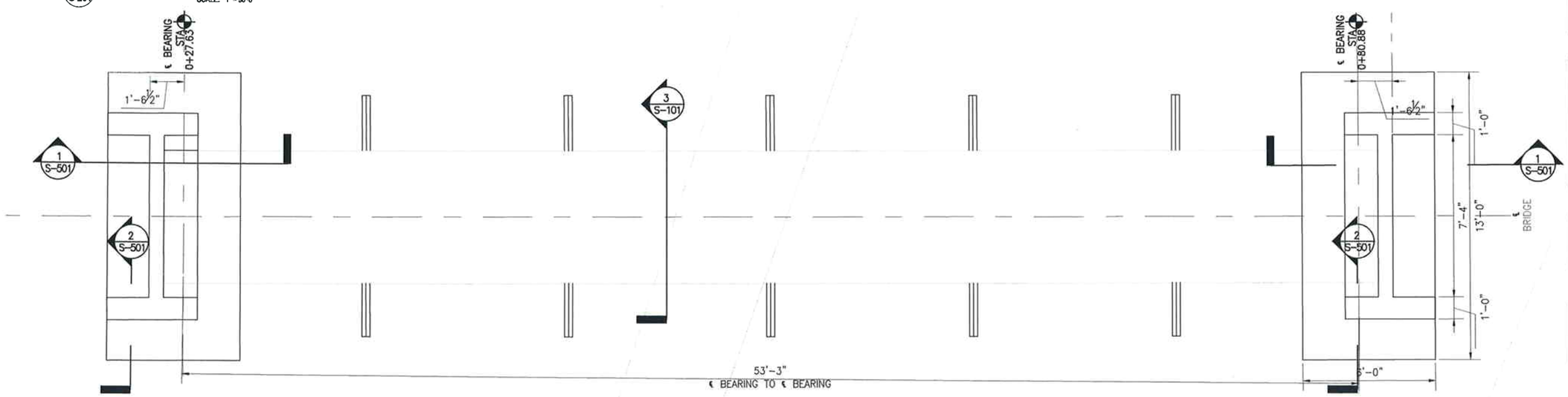

1 / S-201 PLAN – PROPOSED FOUNDATION LAYOUT
SCALE: 1" = 30'-0"

amec
AMEC
ENVIRONMENT & INFRASTRUCTURE, INC.
1075 BIG SHANTY ROAD NW, SUITE 100
KENNESAW, GA 30144
TEL: (770) 421-3400

STATE OF GEORGIA
No. 18977
PROFESSIONAL ENGINEER
J. MICHAEL GARVIN

PRELIMINARY NOT FOR CONSTRUCTION

PROJECT:
IMPLEMENTATION DRAWINGS
CHARLESTON PARK DAY USE AREA

FORSYTH COUNTY
BOARD OF COMMISSIONERS
110 EAST MAIN STREET
CUMMING, GEORGIA 30040

AMEC PROJECT No: 615112.0136

REVISIONS			
NO.	DATE	BY	APPROVED

DESIGNED BY:	R. DILL
DRAWN BY:	R. DILL
CHECKED BY:	L. COLE
APPROVED BY:	T. HILL
DATE:	21 OCT 2012

SHEET TITLE:
ABUTMENT PLAN & ELEVATION

SHEET NUMBER:	REV. #
S-101	----
SHEET OF SHEETS	

J:\Charleston Park\dwg\cds\S-101.dwg - Layout1 11/28/2012 1:56pm reggie.dill

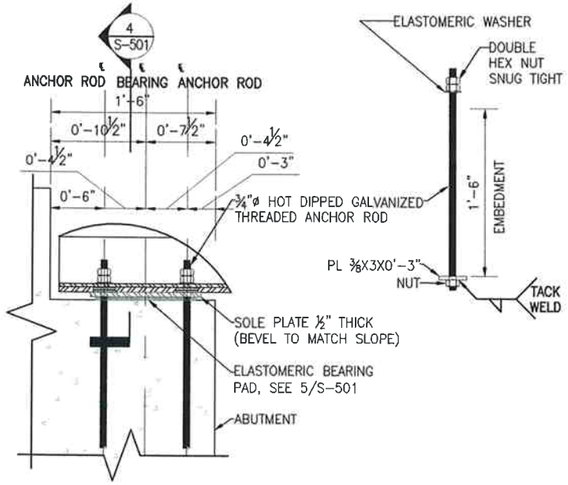

3 S-501 DETAIL – BEARING PAD @ ABUTMENT
SCALE: 1-1/2" = 1'-0"

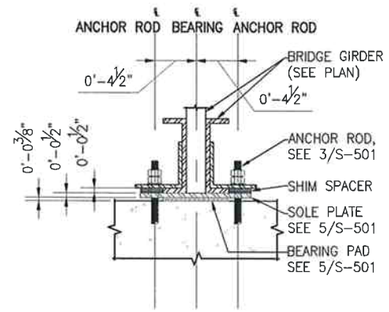

4 S-501 SECTION – ELASTOMERIC BEARING PAD @ ABUTMENT
SCALE: 1-1/2" = 1'-0"

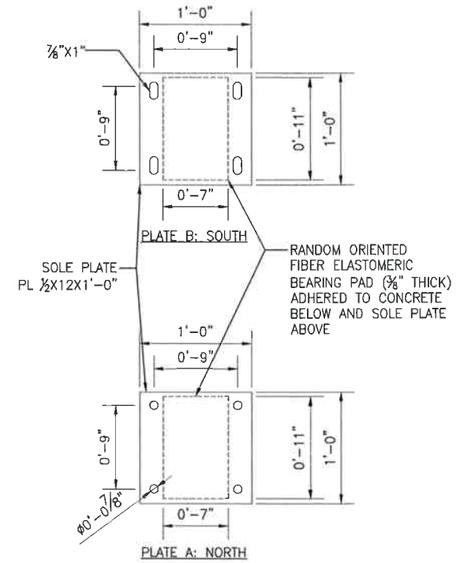

5 S-501 DETAIL – ELASTOMERIC BEARING PAD
SCALE: 1-1/2" = 1'-0"

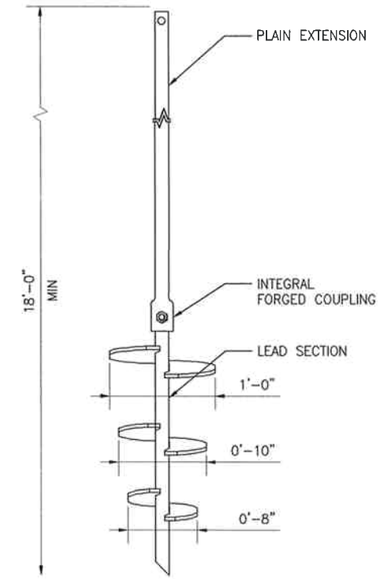

6 S-501 DETAIL – HELICAL PILE
NOT TO SCALE

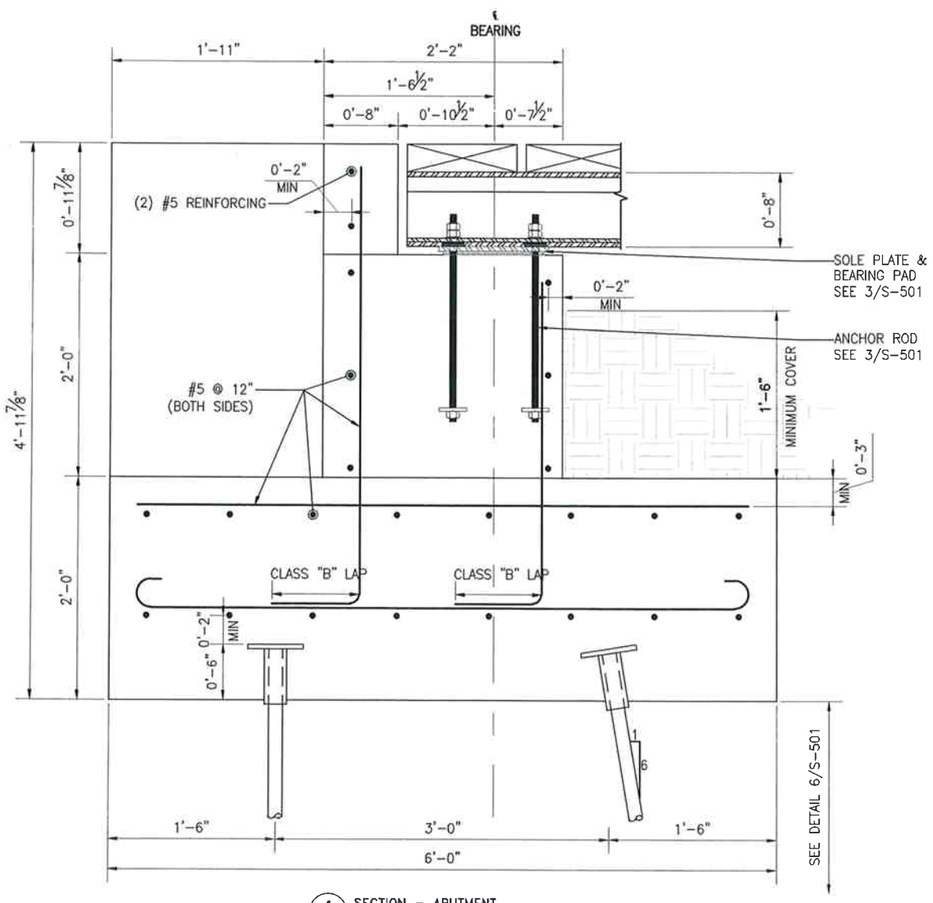

1 S-501 SECTION – ABUTMENT
SCALE: 1-1/2" = 1'-0"

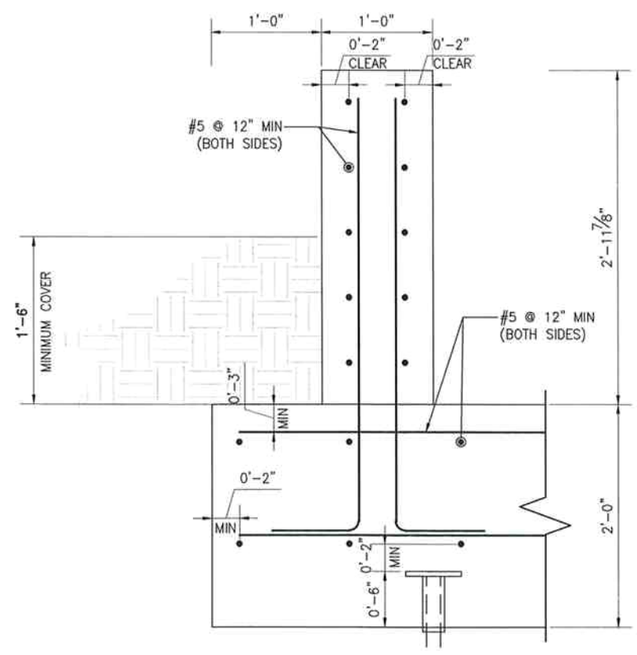

2 S-501 SECTION – ABUTMENT WINGWALL
SCALE: 1-1/2" = 1'-0"

amec
AMEC
ENVIRONMENT & INFRASTRUCTURE, INC.
1075 BIG SHANTY ROAD NW, SUITE 100
KENNESAW, GA 30144
TEL: (770) 421-3400

REGISTERED PROFESSIONAL ENGINEER No. 18977 J. MICHAEL GARVIN

PRELIMINARY NOT FOR CONSTRUCTION

PROJECT:
IMPLEMENTATION DRAWINGS
CHARLESTON PARK DAY USE AREA

FORSYTH COUNTY
BOARD OF COMMISSIONERS
110 EAST MAIN STREET
CUMMING, GEORGIA 30040

AMEC PROJECT No: 6151.12.0136

REVISIONS

NO.	DATE	BY	APPROVED

DESIGNED BY:	R. DILL
DRAWN BY:	R. DILL
CHECKED BY:	L. COLE
APPROVED BY:	T. HILL
DATE:	21 OCT 2012

SHEET TITLE:
ABUTMENT DETAILS

SHEET NUMBER:	REV. #
S-501	----
SHEET OF SHEETS	

J:\Charleston Park\dwg\cds\S-501.dwg - Layout1 11/28/2012 1:56pm reggie.dill

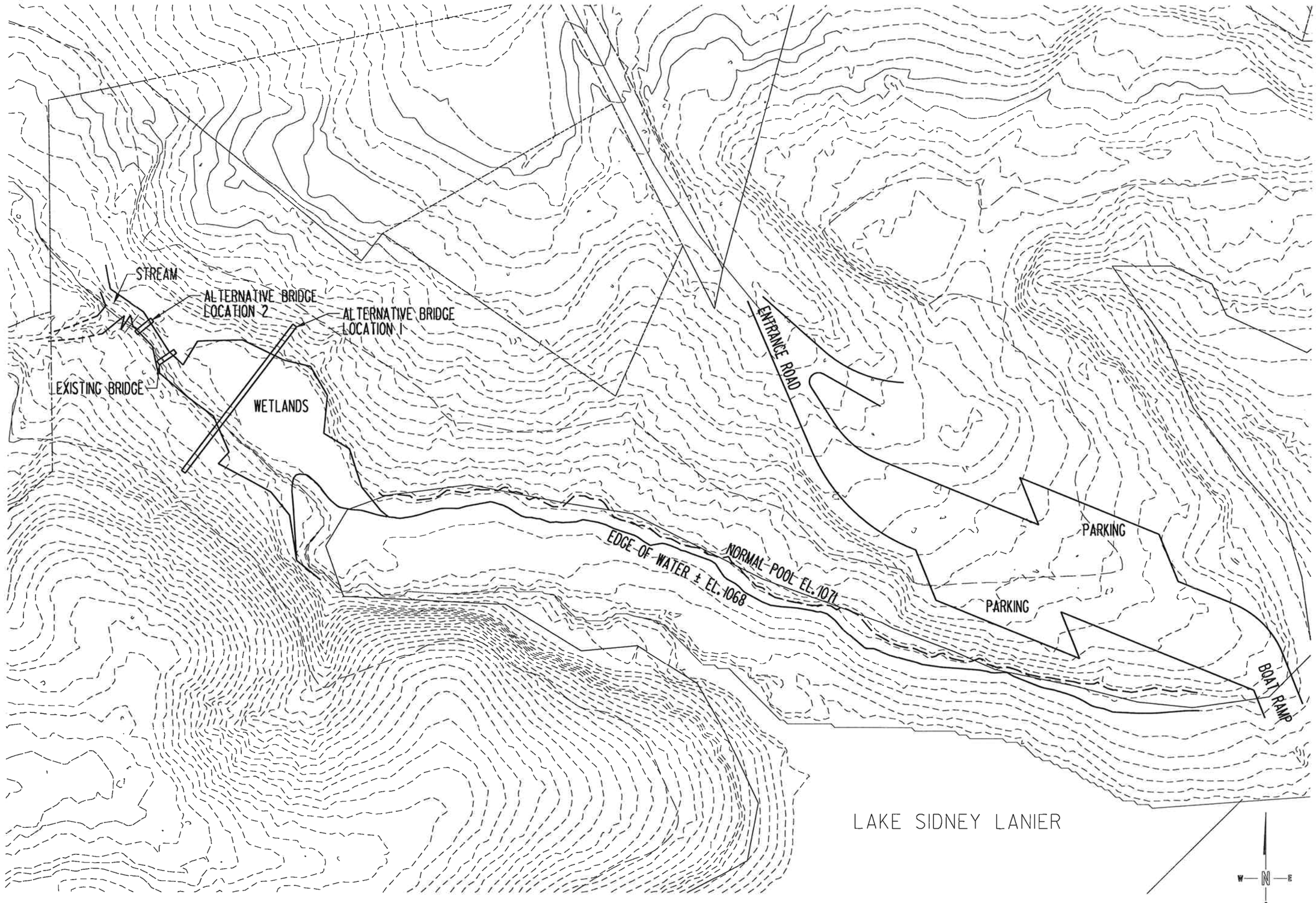

EXHIBIT A

TITLE: PROPOSED BRIDGE AND ALTERNATIVES MAP
CHARLESTON PARK
FORSYTH COUNTY, GEORGIA

625 Holcomb Bridge Road
Norcross, Georgia 30071
770-209-0029 Fax 582-2900
www.unitedconsulting.com
Copyright © United Consulting Group, Ltd.

We're here for you
UNITED CONSULTING

SCALE: 1" = 100'	DATE: 6-30-11	PROJECT NO: 2011.2233.01	
PREPARED: VPV	CHECKED:	REVISIONS:	

CLIENT: FORSYTH COUNTY PURCHASING DEPARTMENT

APPENDIX E – AGENCY CONSULTATION

PENDING

APPENDIX F – PUBLIC COMMENTS (IF APPLICABLE)

PENDING